INTRODUCTION TO WORK COORDINATE SYSTEM (WCS)

June 2017

POWERED BY MASTERCAM'S
DYNAMIC MOTION™ TECHNOLOGY

Mastercam®
Be Dynamic.

INTRODUCTION TO WORK COORDINATE SYSTEM (WCS)

June 2017
© 2017 CNC Software, Inc. – All rights reserved.
Software: Mastercam 2018

Terms of Use

Use of this document is subject to the Mastercam End User License Agreement. The Mastercam End User License Agreement can be found at:

http://www.mastercam.com/companyinfo/legal/LicenseAgreement.aspx

Be sure you have the latest information!

Information might have changed or been added since this document was published. The latest version of the document is installed with Mastercam or can be obtained from your local Reseller. A ReadMe file (ReadMe.PDF) – installed with each release – includes the latest information about Mastercam features and enhancements.

Table of Contents

Introduction **5**

General Tutorial Requirements 5

Working With Views and Planes **7**

Views and Planes 8

1 Changing the Tplane vs the WCS **11**

Exercise 1: Selecting the Tplane 12

Exercise 2: Cutting the Slot 16

Exercise 3: Backplotting the Toolpath 20

Exercise 4: Reviewing the NC Code 23

Exercise 5: Changing the WCS to Machine the Slot Lying Flat 24

Exercise 6: Using the New WCS for a Toolpath 27

Exercise 7: Reviewing the NC Code 30

2 Machining on Different Fixtures **33**

Exercise 1: Creating the First Plane 34

Exercise 2: Creating the Second Plane 36

Exercise 3: Using the First Plane 39

Exercise 4: Creating the First Toolpath 40

Exercise 5: Using the Second Plane to Create a Toolpath 46

Exercise 6: Reviewing the NC Code 50

3 Updating Toolpaths **53**

Exercise 1: Rotating the Part 54

Exercise 2: Placing the Part on the Fixture 59

Exercise 3: Creating New WCS Planes 65

Exercise 4: Updating the Contour (Ramp) Toolpath 70

Exercise 5: Updating the Dynamic Mill Toolpath 74

Exercise 6: Updating the Contour (2D) Toolpath 77

Exercise 7: Backplotting the Toolpaths 80

Conclusion **83**

Mastercam Resources 83

Contact Us 84

Introduction

Welcome to the Introduction to Work Coordinate System (WCS) tutorial. Before you begin the lessons, it is recommended you first complete the *Introduction to Mastercam* tutorial, which gives an introduction to Mastercam's views and planes.

Tutorial Goals

- Learn about views and planes, specifically the Work Coordinate System.
- Understand the difference between tool planes (Tplanes) and WCS.
- Machine two parts on different fixtures using one setup.
- Create and change the WCS for previously created toolpaths.

WARNING: Screen colors in the tutorial pictures were modified to enhance image quality; they may not match your Mastercam settings or the tutorial results. These color differences do not affect the lesson or your results.

Estimated time to complete this tutorial: 4 hours

General Tutorial Requirements

All Mastercam 2018 tutorials have the following general requirements:

- You must be comfortable using the Windows® operation system.
- The tutorials cannot be used with Mastercam Demo/Home Learning Edition. The Demo/HLE file format (`emcam`) is different from Mastercam (`mcam`), and basic Mastercam functions, such as file conversions and posting, are unavailable.

- Each lesson in the tutorial builds on the mastery of the preceding lesson's skills. We recommend that you complete them in order.
- Additional files may accompany a tutorial. Unless the tutorial provides specific instructions on where to place these files, store them in a folder that can be access from the Mastercam 2018 workstation, either with the tutorial or in any location that you prefer.
- You will need an internet connection to view videos that are referenced in the tutorials. All videos can be found on our YouTube channel: www.youtube.com/user/MastercamTechDocs
- All Mastercam tutorials require you to configure Mastercam to work in a default metric or English configuration. The tutorial provides instructions for loading the appropriate configuration file.

Working With Views and Planes

Mastercam uses a 3D Cartesian coordinate system to locate your work in three-dimensional space. This means that geometry and toolpath positions are expressed in terms of three coordinate axes: X, Y, and Z. Each axis is signed, which means it has a positive and negative direction.

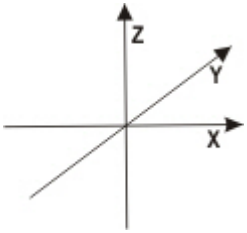

The focus of this tutorial is the Work Coordinate System, or WCS. The WCS refers to the alignment of the coordinate system itself. You can choose to align the coordinate system axes with any view you wish.

When you create a new WCS the following happens:

- You map the XY plane to the plane of the view.
- The origin of the view becomes your new (0,0,0) point.
- The plane becomes the **Top** plane in the new working coordinate system.
- Gviews, Cplanes, and Tplanes are all measured relative to the WCS and its origin.

Views and planes are used frequently in Mastercam for many drawing and machining purposes. However, you select a new WCS much less often, and only for specific machining purposes.

Views and Planes

This section introduces ways to access and use planes. You use planes for three main functions.

- **Graphic views (Gviews)**: Determines the angle from which you look at your part in the graphics window.
- **Construction planes (Cplanes)**: When you draw geometry, the Cplane is where geometry is created. This doesn't have to be the same as the Gview. For example, you can look at your part in **Isometric Gview**, while drawing geometry in the **Front Cplane**.
- **Tool planes (Tplanes)**: This plane is typically normal to the tool axis. Tplanes are only used when creating toolpaths. They determine the tool orientation. In most cases, your Cplane is the same as your Tplane (the most common exceptions are Mill-Turn operations).

In addition, you can create a new WCS by mapping the entire coordinate system to a different plane.

Most of the tools for working with planes are located in the Planes Manager on the left side of Mastercam's window. To view the Planes Manager, click the **Planes** tab at the bottom of the window.

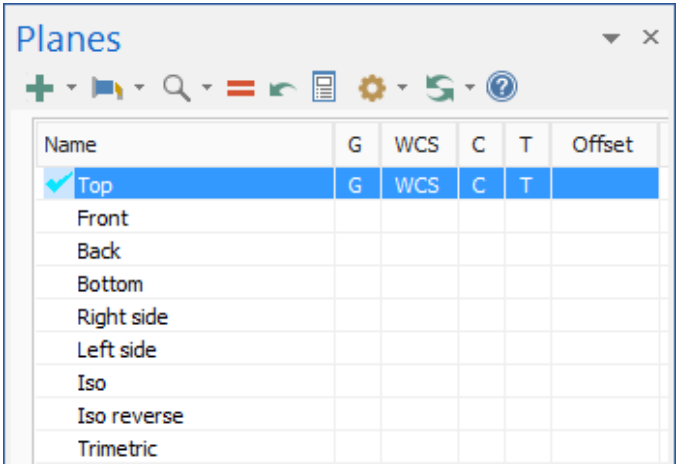

Mastercam displays the current Cplane, Tplane, and WCS in the Status Bar.

Mastercam displays the current Gview in the bottom-left corner of the graphics window. You can set the Gview from the **View** tab, from the graphics window's right-click menu, or from the Planes Manager.

In this tutorial's first lesson, you create a toolpath to machine a part in two ways, one using a Tplane and one by changing the WCS.

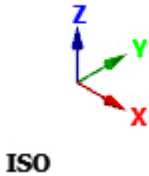

1

Changing the Tplane vs the WCS

In this lesson, you create a Dynamic toolpath to cut the slanted slot face of the part. You create toolpaths to machine it in two ways:

First, you machine the part as if it were mounted on a table. You use a machine with rotary axis capability so that the tool axis is rotated to the proper orientation. To do this, you select a Tplane aligned with the slanted face.

Second, you machine the part as if it were mounted in a fixture. You create a toolpath that machines the part as if it were lying flat, without moving or transforming geometry. To do this, you change the WCS so that it aligns with the slanted faces of the part.

Lesson Goals

- Create a Dynamic Contour toolpath with the selected Tplane.
- Change the WCS on the Dynamic Contour toolpath.
- Review both NC files to see the rotary position commands.

Exercise 1: Selecting the Tplane

The Tplane determines the orientation of the XY plane in which the toolpath is calculated. In a simple 3-axis toolpath, the tool axis is typically normal to the Tplane. To set the Tplane, you must align it with a view. You must also keep in mind the following when setting a view:

- The XY plane of your toolpath is parallel to the selected view.
- The origin of the selected view determines the zero point of your part program.

Unless the Tplane is parallel to the default XY plane, selecting a Tplane typically results in A- and/or B-axis codes when you post your toolpaths.

Note: To post A- and B-axis code results, your machine definition must be configured with the proper rotary axis components, and your post must be properly configured for rotary output.

In this exercise, you align the Tplane with the slanted face of the part.

1. Start Mastercam using your preferred method:
   a. Double-click Mastercam's desktop icon.

   OR

   b. Launch Mastercam from the Windows Start menu.

2. Select the default metric configuration file:
   a. Click the **File** tab.
   b. Choose **Configuration** from Mastercam's Backstage View to open the System Configuration dialog box.

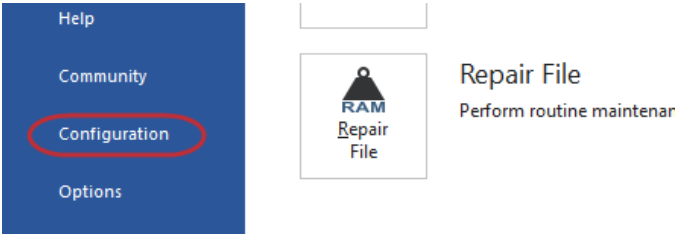

   c. Choose `...\mcamxm.config <Metric>` from the **Current** drop-down list.

   d. Click **OK**.

3. Open the part file, `BRACE W-VIEW`, which was provided with the tutorial.

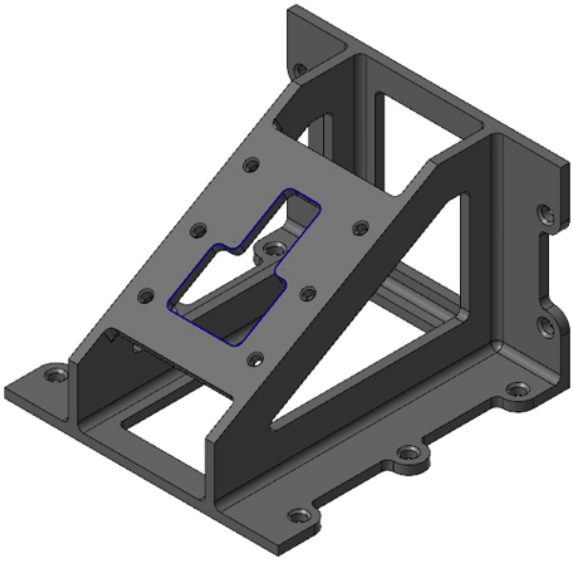

4. If necessary, fit the geometry to the screen using [**Alt+F1**].
5. Click the **Planes** tab in the lower-left of Mastercam's window. (If you do not see the Planes tab, activate it from the Managers function group in Mastercam's **View** tab.)

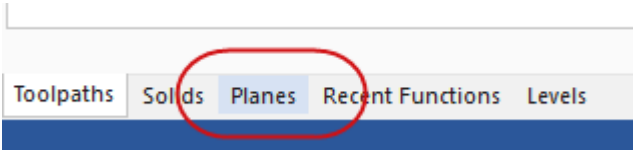

The Planes Manager displays.

6. In the row for FACE OF PART, click in the **C** column.

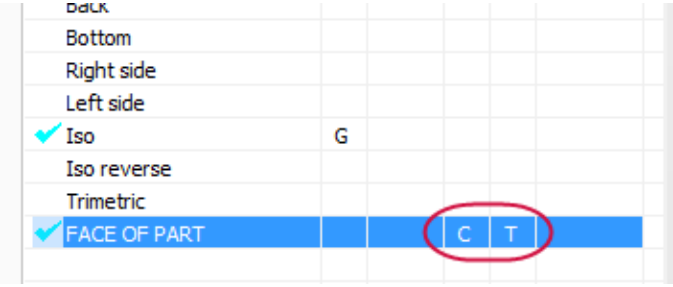

Due to the **Tplane follows Cplane** rule, Mastercam sets both the Cplane and Tplane to the FACE OF PART plane, which contains the slanted slot.

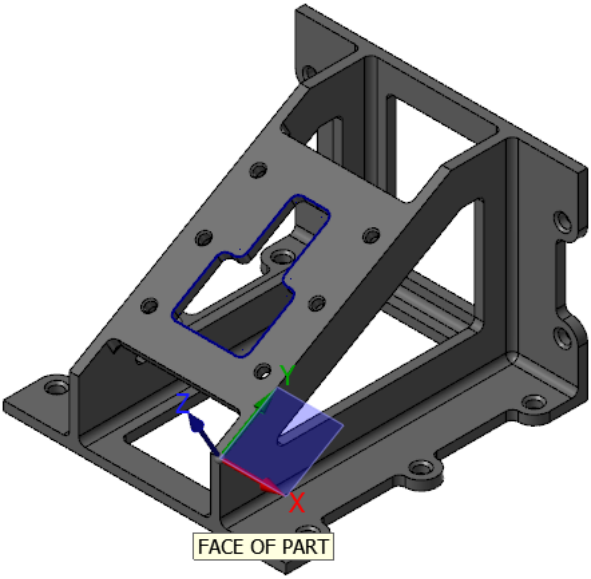

7. Choose **File**, **Save As**, and save the part file as `BRACE W-VIEW_XXX`, where `XXX` are your initials. This protects the original tutorial file from being overwritten.

Exercise 2: Cutting the Slot

In this exercise, you create a Dynamic Contour toolpath to cut out the slot in the face of the part.

1. Select **Dynamic Contour** from the 2D gallery on the **Mill Toolpaths** contextual tab.

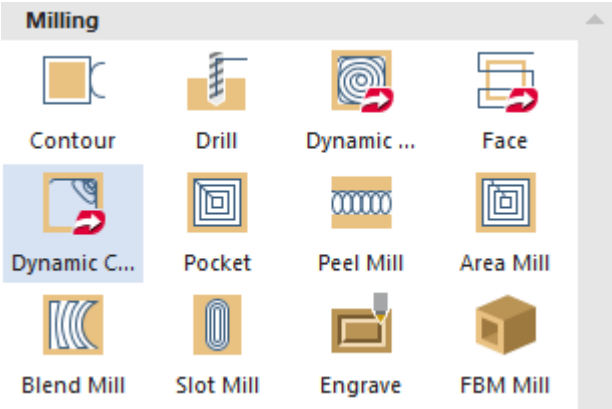

The Chain Options dialog box displays.

2. Click **Select** under Machining regions.

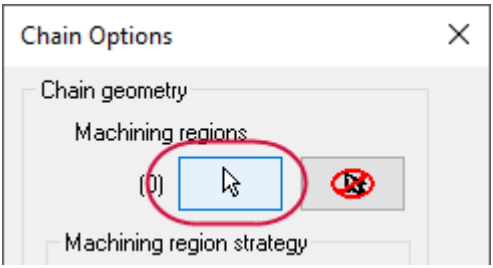

The Chaining dialog box displays.

3. Chain the contour shown below. The chaining arrow should point counterclockwise.

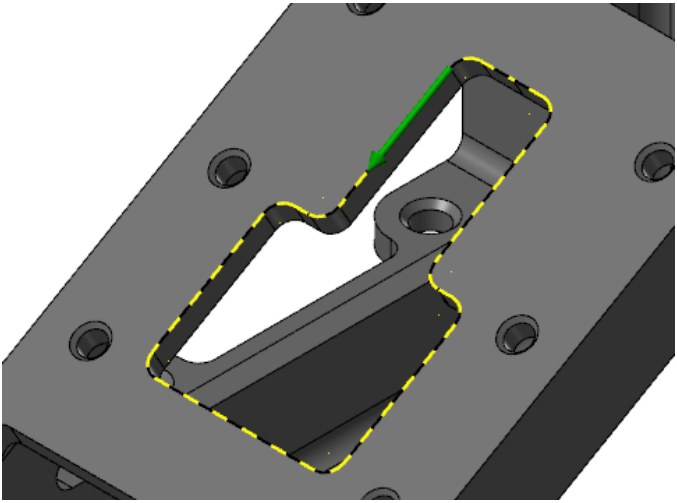

4. Click **OK** in the Chaining dialog box and in the Chain Options dialog box. The 2D High Speed Toolpath - Dynamic Contour dialog box displays.
5. Select the **Tool** page.

6. Select **10. BULL ENDMILL 1. RAD** in the tool list.

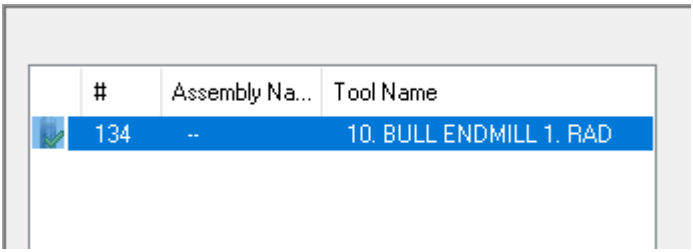

7. Select the **Cut Parameters** page.

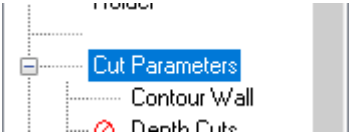

8. Verify that the settings match what is shown below:

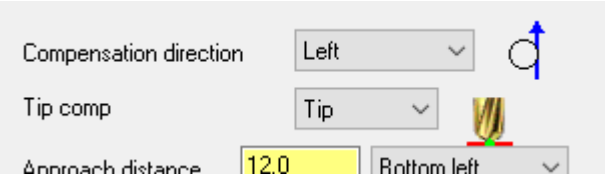

9. Select the **Linking Parameters** page.

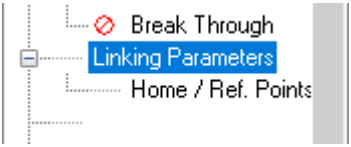

10. Set the following parameters:

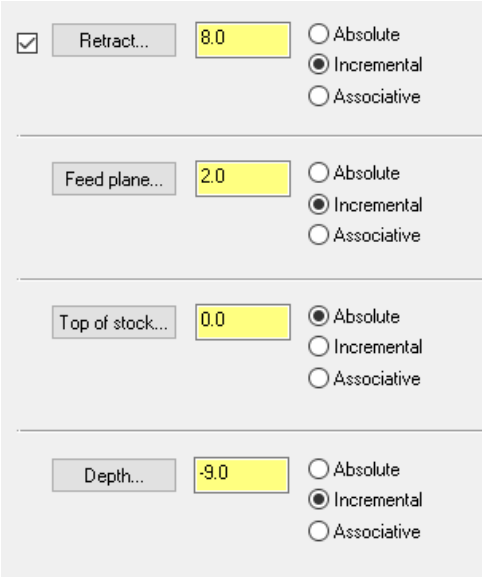

a. Enter **8.0** for **Retract**.

b. Enter **2.0** for **Feed plane**.

c. Enter **0.0** for **Top of stock**.

d. Enter **-9.0** for **Depth**.

e. Set all parameters except **Top of stock** to **Incremental**.

11. Click **OK** to generate the Dynamic Contour toolpath.

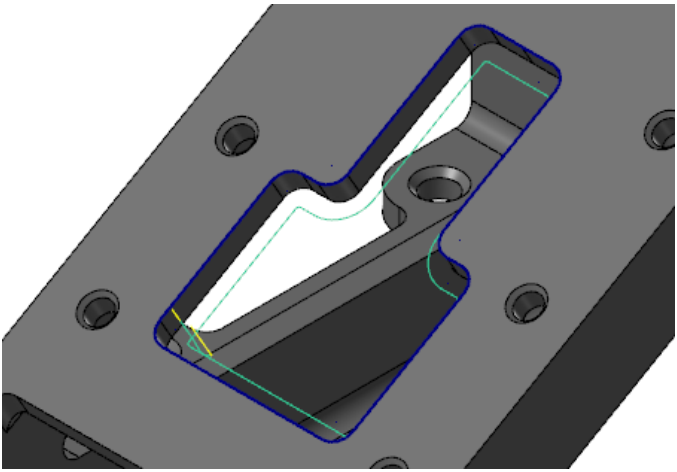

12. Save your file.

Exercise 3: Backplotting the Toolpath

In this exercise, you backplot the toolpath to see how the tool is oriented relative to the part.

1. In the lower-left of Mastercam's window, select the **Toolpaths** tab.

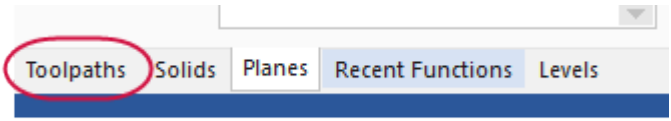

The Toolpaths Manager displays.

2. Select **2D High Speed (2D Dynamic Contour Mill)** in the Toolpaths Manager.

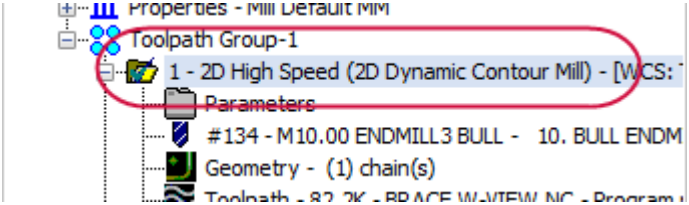

3. Click **Backplot selected operations** in the Toolpaths Manager.

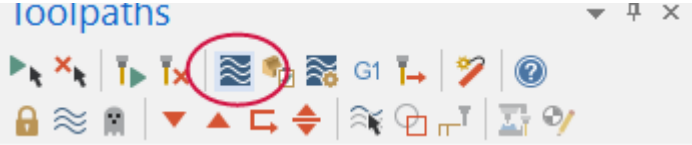

4. If necessary, select **Display tool** and **Display holder**.

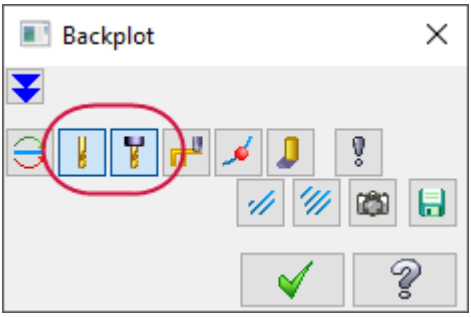

5. Click **Play** to see the tool machine the toolpath.

The tool is rotated to stay normal to the slanted face of the part. The face defines the Tplane, FACE OF PART.

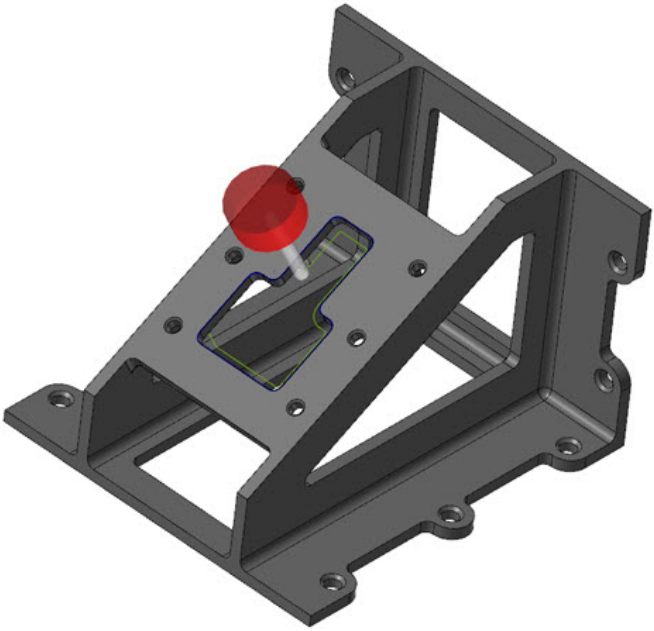

6. Click **OK** in the Backplot dialog box when you have finished reviewing the tool motion.

Exercise 4: Reviewing the NC Code

Since the Tplane (and the tool axis) is tilted about the X axis, you should see an A-axis rotation code when you post this toolpath.

1. Select **2D High Speed (2D Dynamic Contour Mill)** in the Toolpaths Manager, and select **Post selected operations**.

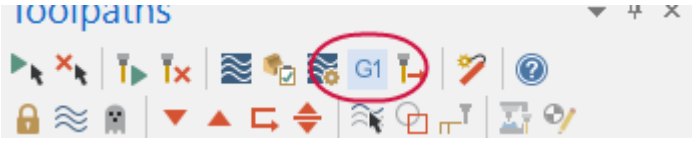

   The Post processing dialog box displays.

2. Set the options as shown below and click **OK**.

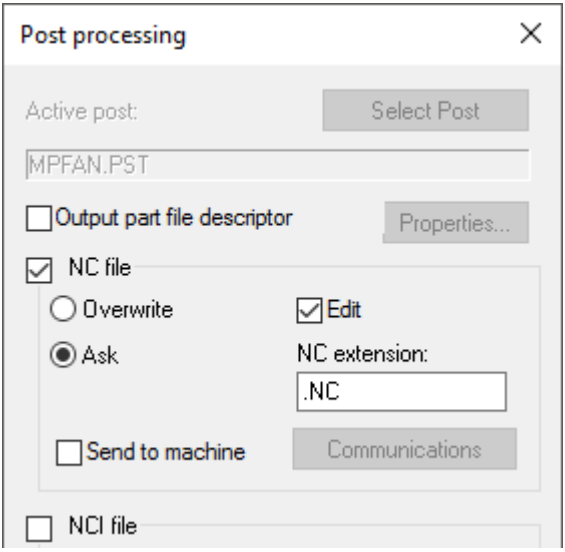

3. Click **Save** if prompted to save the NC file. Mastercam Code Expert opens.
4. Review the NC code when it appears.

```
N100 G21
N102 G0 G17 G40 G49 G80 G90
N104 T134 M6
N106 G0 G90 G54 X-101.159 Y75.597 A-330. S2387 M3
N108 G43 H134 Z8.
N110 Z2.
```

5. You should see the A-axis rotation code before the tool plunges into the part.
6. Close Mastercam Code Expert.

Exercise 5: Changing the WCS to Machine the Slot Lying Flat

In this exercise, you machine the slot using a different approach, as if it were lying flat. Instead of rotating the tool, you rotate the coordinate system so that it is parallel with the desired face of the part. To do this, you align the WCS with the **FACE OF PART** plane.

In this example, the part is fixtured so that you can cut it on a 3-axis mill that does not have a rotary axis. Moving the coordinate system so that it aligns with the selected part geometry means that you do not have to transform the part. This is often easier and more efficient.

1. Right-click in the graphics window and select **Right (WCS)**.

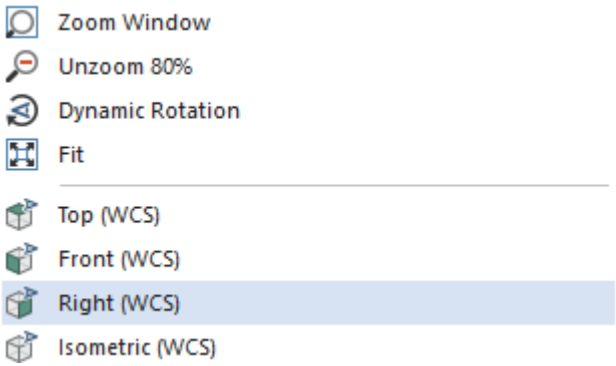

The view changes to the right side of the WCS. Note that the gnomon and part orientation in the graphics window.

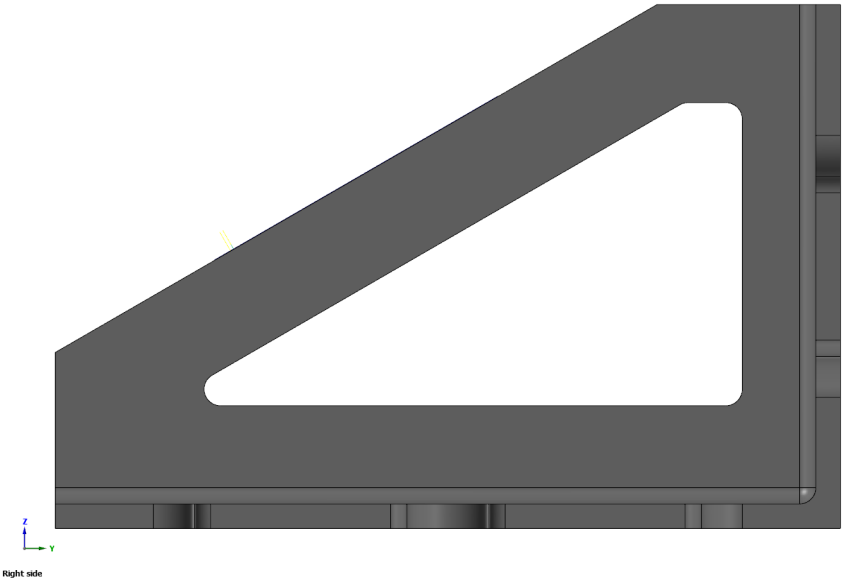

2. Display the Planes Manager.
3. In the **FACE OF PART** row, click in the **WCS** column and in the **C** column.

Name	G	WCS	C	T	Offset
✔ Top					
Front					
Back					
Bottom					
✔ Right side	G				
Left side					
✔ Iso					
Iso reverse					
Trimetric					
✔ FACE OF PART		WCS	C	T	

4. Right-click in the graphics window, and select **Right (WCS)**.

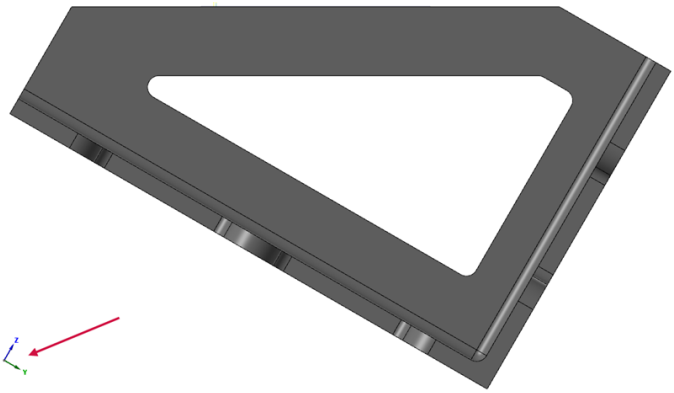

You can see that the part looks like it has been rotated. When you look at the gnomon in the lower-left corner, however, you can see that the axes have been rotated, not the part.

Exercise 6: Using the New WCS for a Toolpath

Normally, to create the new toolpath, you would follow the same steps as for the previous toolpath. For this exercise, however, you edit the existing toolpath to use the new WCS and compare the results.

1. Right-click in the graphics window, and select **Isometric (WCS)**.

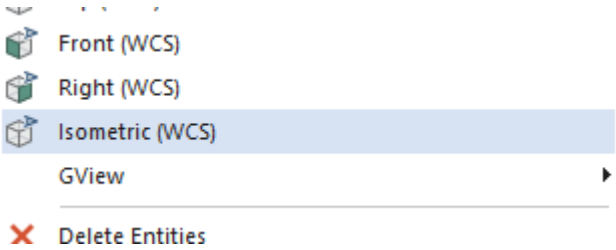

2. In the Toolpaths Manager, select **Parameters** under the 2D High Speed (2D Dynamic Contour Mill) toolpath.

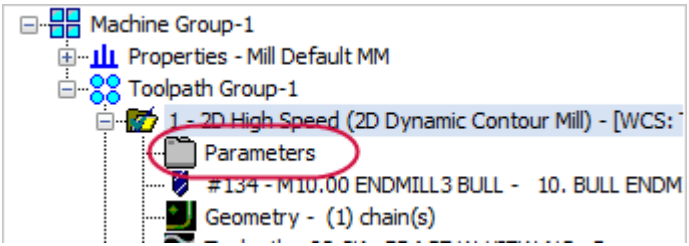

3. Select the **Planes (WCS)** page.

4. Click the **Select WCS plane** button in the Working coordinate system section.

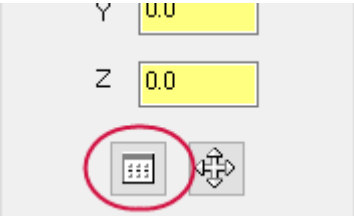

The Plane Selection dialog box displays.

5. Select **FACE OF PART**, and click **OK** to return to the 2D High Speed Toolpath - Dynamic Contour dialog box.

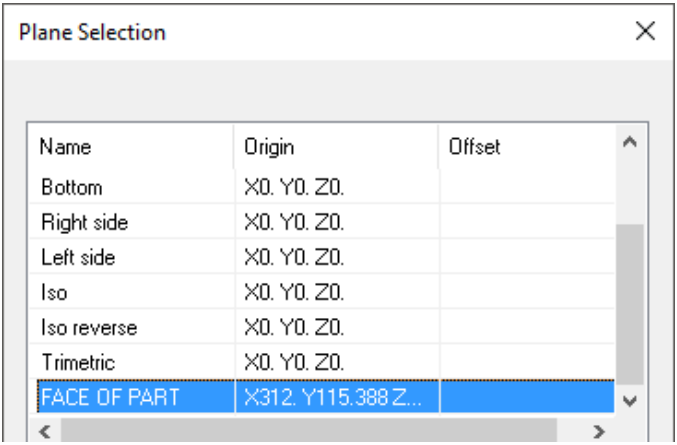

6. Verify that your Planes (WCS) page parameters matches what is shown below:

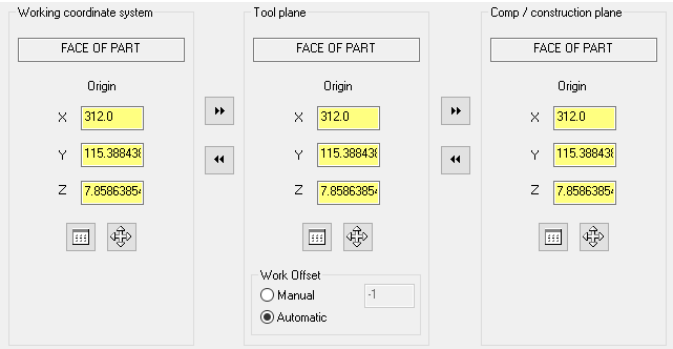

If your Planes (WCS) page looks different from what is shown above, make sure that the **Display plane info relative to the WCS** option is off. You can find this option in the Planes Manager's **Display options**, as shown in image below:

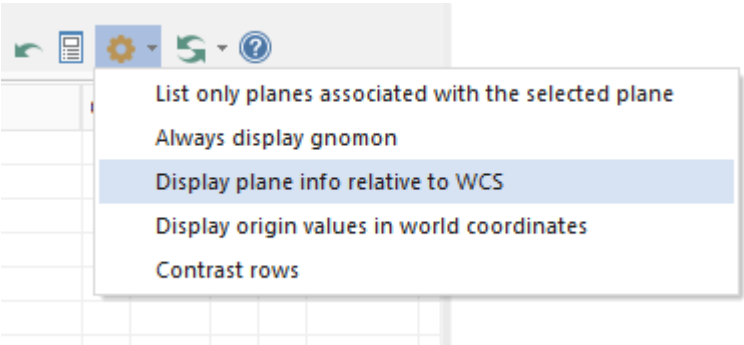

7. Click **OK** to accept the parameter changes.
8. Select **Regenerate all dirty operations** in the Toolpaths Manager.

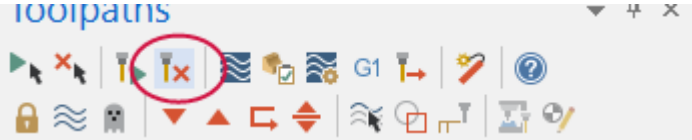

9. Backplot this toolpath like the previous one.

   You can see that the tool axis is not rotated at all. This means that the part is lying flat when machined, so the tool does not need to rotate around to machine the slanted face.

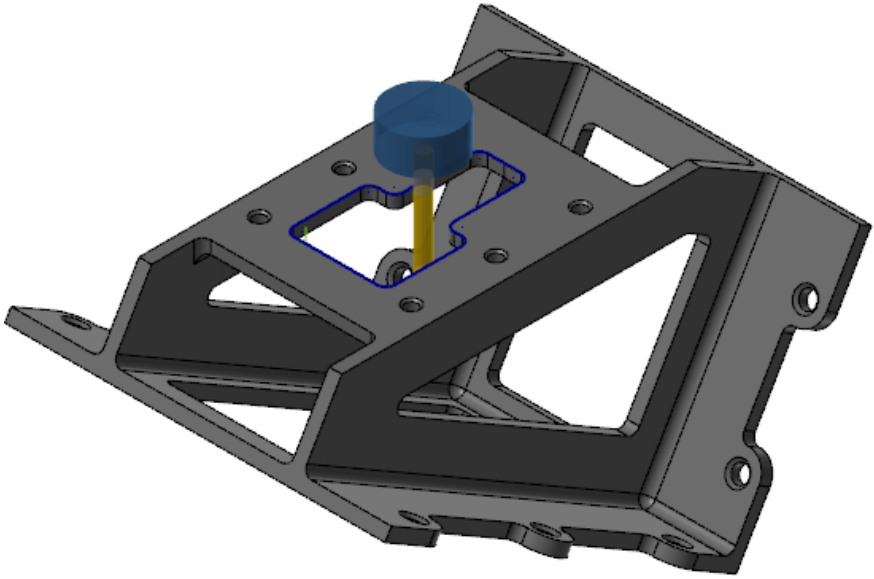

Exercise 7: Reviewing the NC Code

After posting this toolpath, you should find no rotary output in your NC Code.

1. Select the Dynamic Contour toolpath in the Toolpaths Manager and click **Post selected operations**.

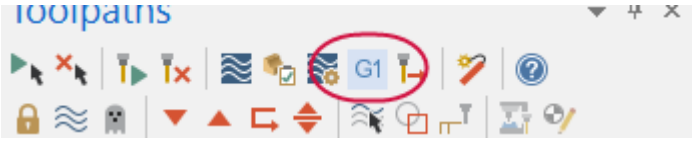

The Post processing dialog box displays.

2. Set the options as shown below and click **OK**.

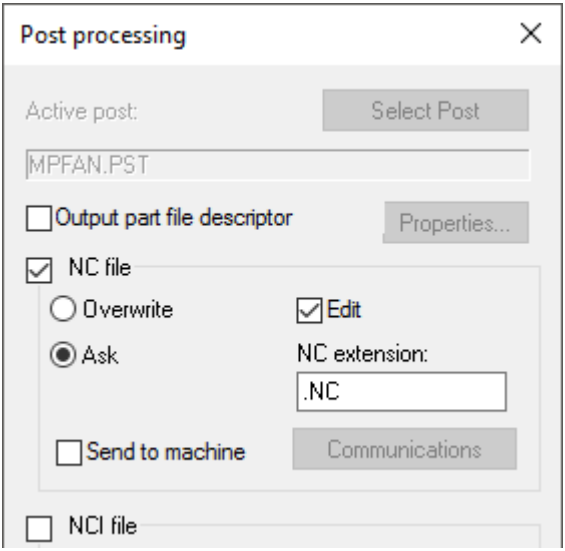

3. If prompted, click **Save** to save the NC file.
4. If prompted to overwrite an existing file, click **Yes**. Mastercam Code Expert opens.
5. Review the NC code when it appears.

```
 8   N100 G21
 9   N102 G0 G17 G40 G49 G80 G90
10   N104 T134 M6
11   N106 G0 G90 G54 X-101.159 Y75.597 A0. S2387 M3
12   N108 G43 H134 Z8.
13   N110 Z2.
```

You should see no A-axis rotation code.

A0 only appears because you posted this toolpath with the same post used in the previous toolpath. Because you used the WCS to eliminate rotary output, you could safely use a 3-axis post and machine definition.

You have now successfully changed the Tplane and the WCS of a toolpath. In the next lesson, you machine two parts on different fixtures.

2

Machining on Different Fixtures

In this lesson, you machine two parts with the same NC file on two different fixtures. Each part is mounted on a different vise on your table.

To machine the parts, you assign a different work offset to each vise. Then, create two different toolpaths and include the offset number in each. By basing each toolpath on an offset number of a coordinate position, your operator can run the job without knowing how the vises are positioned. All they need to do is touch off the parts properly before running the job to set each position in the control.

Lesson Goals

- Create a new plane for each vise and define its origin.
- Create a toolpath for each created plane.
- Review both NC files to see the correct offset codes.

Exercise 1: Creating the First Plane

Since both parts will be machined in the top plane, you create the new planes by copying the system **Top** plane. You then change the origin and work offset for each new plane.

1. Open the part file, `MULTIPLE-FIXTURES`, which was provided with the tutorial.
2. If necessary, fit the geometry to the screen using [**Alt+F1**].
3. Select the **Planes** tab to view the Planes Manager.

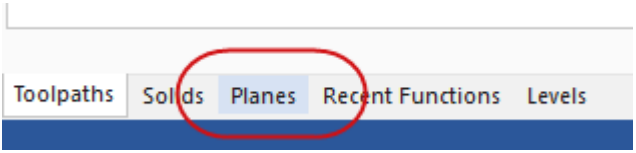

The Planes Manager displays.

4. Right-click **Top**, and select **Duplicate**.

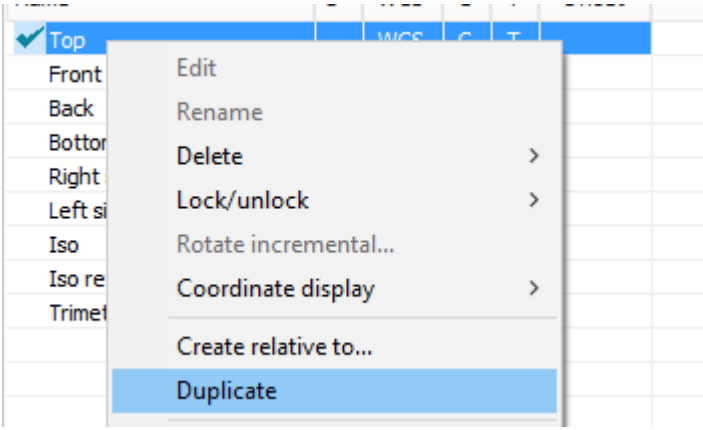

Mastercam creates a plane, Top-1, and automatically selects it.

5. Select **Manual**, and enter **3** for the **Work offset**.

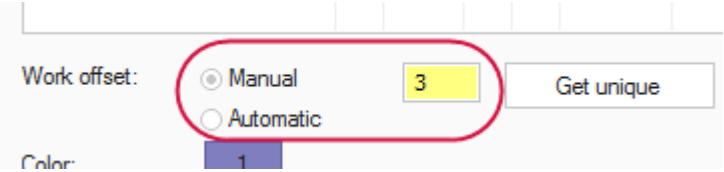

You have now set work offset to 3, which indicates a Gcode 57 for this machine. A work offset number is used to tell the machine the part's location on the fixture in relation to the machine origin.

6. Enter **Offset for fixture 1** in the **Comment** area.

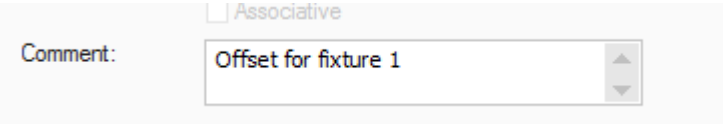

7. Double-click **Top-1**, and rename the plane to **G57 PLANE**.

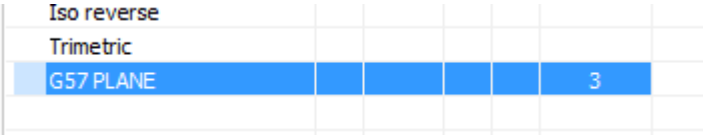

8. Click **Select** to the right of the origin coordinates to return to the graphics window to select a new origin for the created plane.

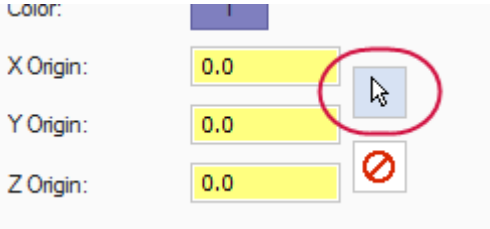

9. Select the point on the right side of the left vise.

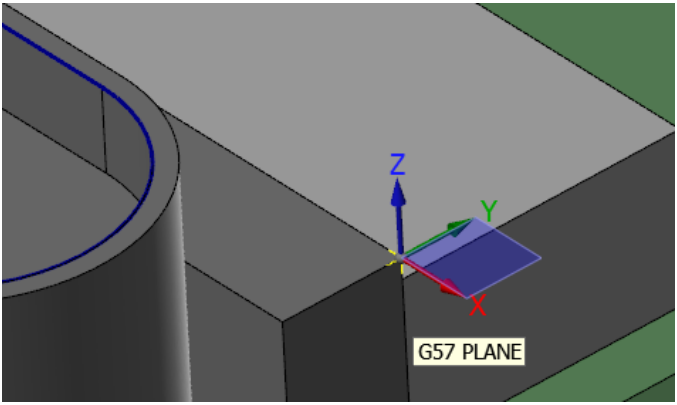

10. Choose **File**, **Save As**, and save the part file as `MULTIPLE-FIXTURES_XXX`, where `XXX` are your initials.

Exercise 2: Creating the Second Plane

You now repeat the previous process for the second vise.

1. Right-click **Top**, and select **Duplicate**.

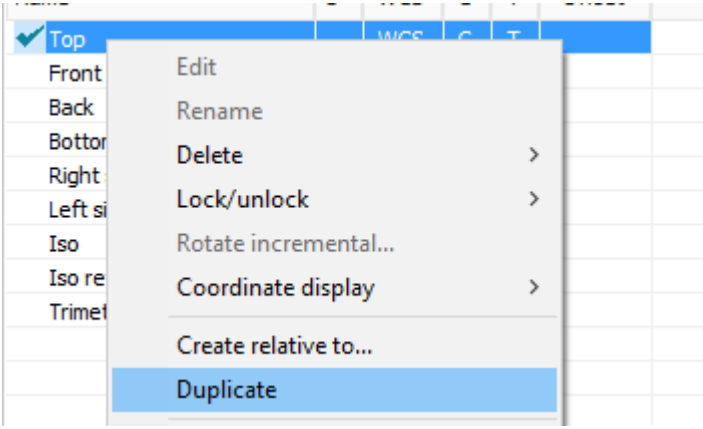

Mastercam creates another plane, Top-1, and automatically selects it.

2. Select **Manual**, and enter **4** for the **Work offset**.

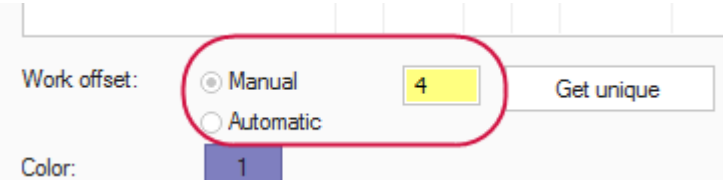

3. Enter **Offset for fixture 2** in the **Comment** area.

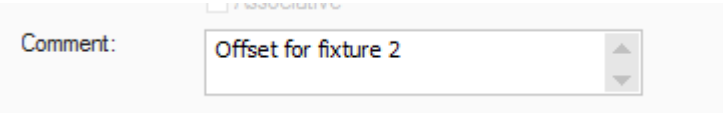

4. Double-click **Top-1**, and rename the plane to **G58 PLANE**.

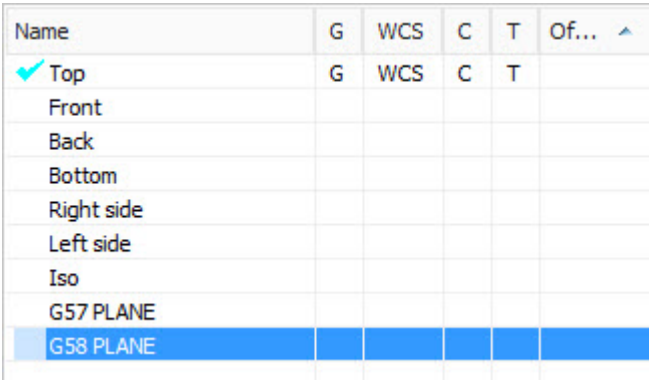

Name	G	WCS	C	T	Of...
Top	G	WCS	C	T	
Front					
Back					
Bottom					
Right side					
Left side					
Iso					
G57 PLANE					
G58 PLANE					

You will use this plane for the vise on the right side of the table.

5. Click **Select** to the right of the origin coordinates to return to the graphics window to select a new origin for the created plane.

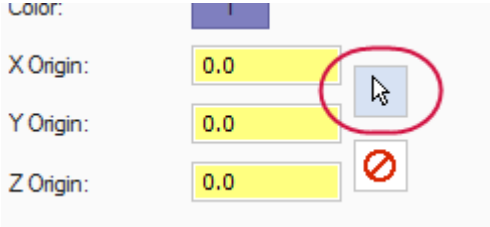

6. Select the point on the right side of the right vise.

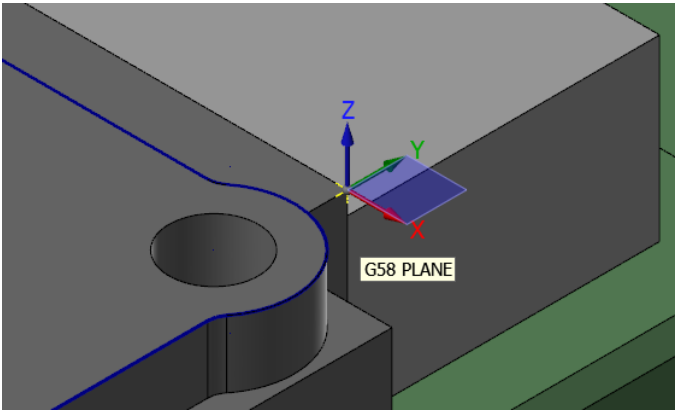

7. Save the part file.

Exercise 3: Using the First Plane

In this exercise, you set the Tplane to the **G57 PLANE** to set the part zero and work offset to the values you associated with the plane when you created it.

1. In the Planes Manager, click the **C** column for the G57 PLANE to set the Cplane.

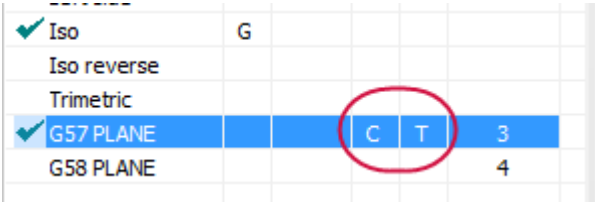

   The Tplane setting follows.

2. Press [**F9**] to display the new Tplane/Cplane axes in blue.

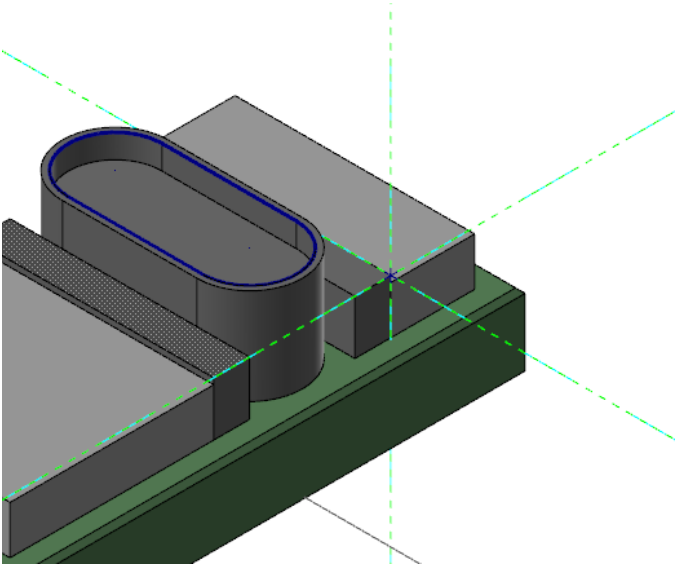

The fixture table has been hidden in the above image to make the axes easier to see.

3. Press [**F9**] again to hide the axes.
4. Save your part file.

Exercise 4: Creating the First Toolpath

In this exercise, you create a Dynamic Mill toolpath for the part in the G57 PLANE vise.

1. Select **Dynamic Mill** from the 2D gallery on the **Mill Toolpaths** contextual tab.

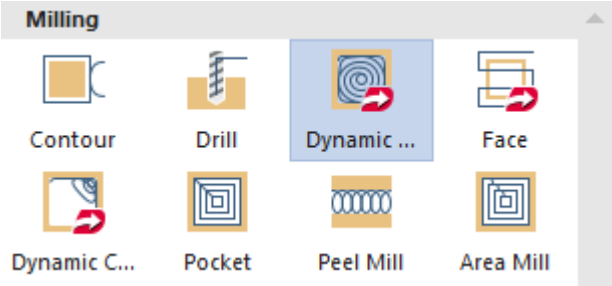

The Chain Options dialog box displays.

2. Click **Select** under Machining regions.

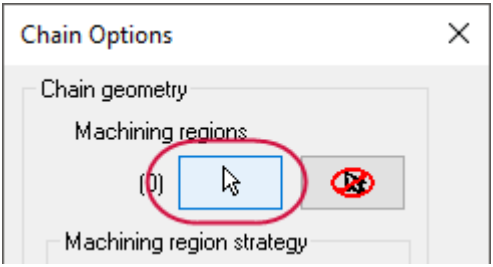

The Chaining dialog box displays.

3. Chain the contour at the top of the pocket in the G57 vise. Chain direction does not matter for this operation.

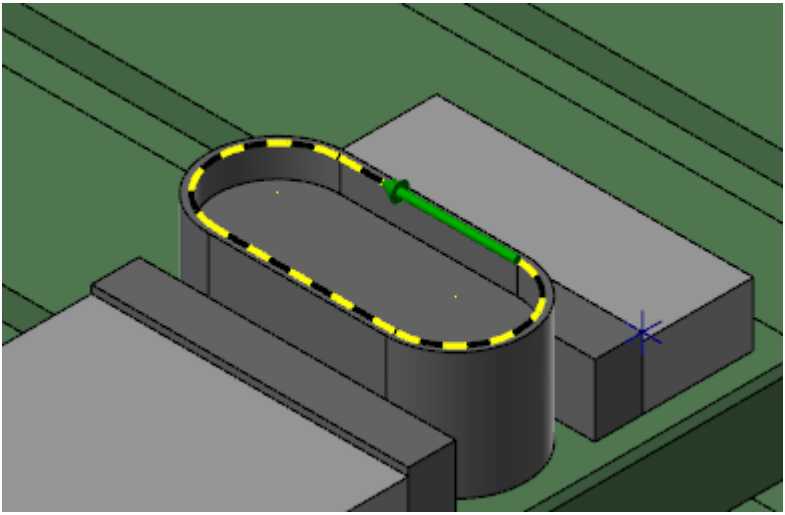

4. Click **OK** in the Chaining dialog box and in the Chain Options dialog box.

   The 2D High Speed Toolpaths - Dynamic Mill dialog box displays.

5. Select the **Tool** page.

6. Select **10. FLAT ENDMILL** from the tool list.

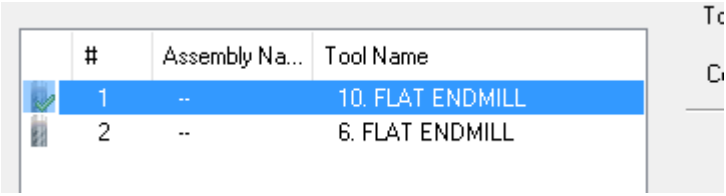

7. Enter **G57 - vise #1** in the **Comment** area.

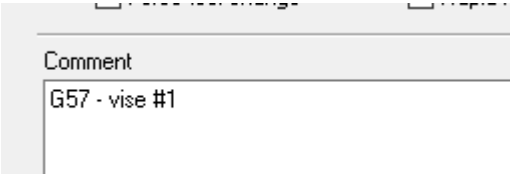

8. Select the **Cut Parameters** page.

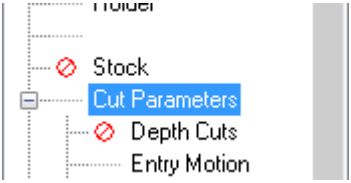

9. Enter **75.0** for the **Stepover** percentage.

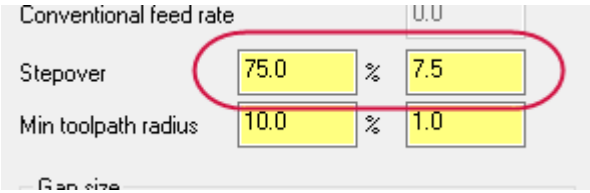

10. Select the **Depth Cuts** page.

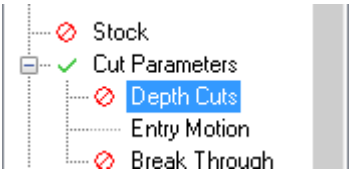

11. Select the **Depth cuts** checkbox to enable the page, and set the following parameters:

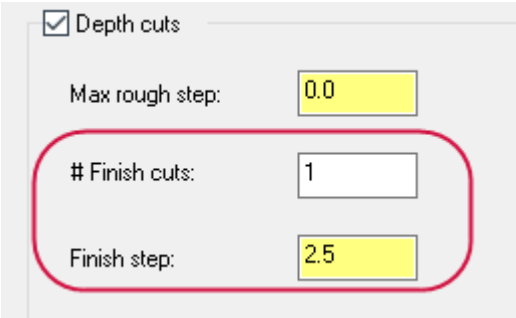

- Enter **1** for **# Finish cuts**.
- Enter **2.5** for **Finish step**.

12. Select the **Entry Motion** page.

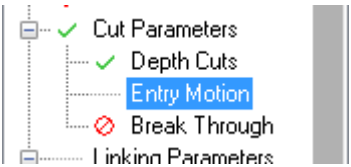

13. Enter **1.0** for the **Z clearance**.

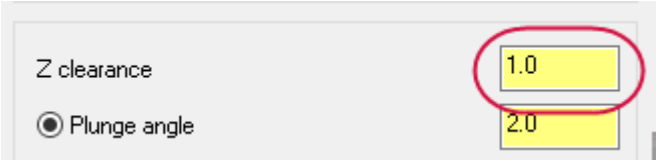

14. Select the **Linking Parameters** page.

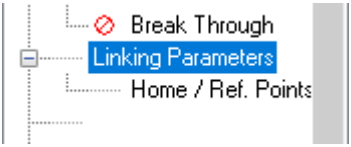

15. Enter the following parameters:

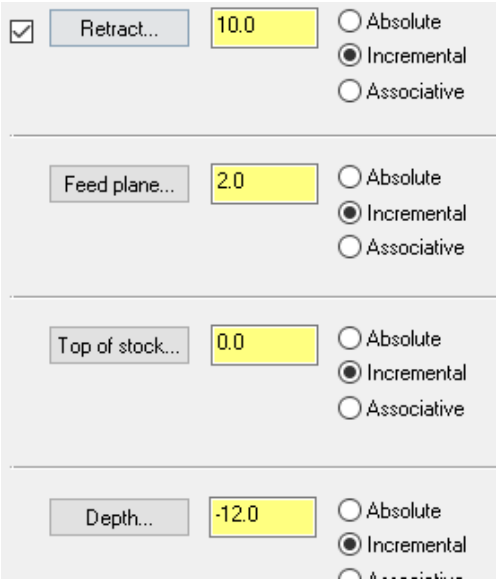

- Enter **10.0** for **Retract**.
- Enter **2.0** for **Feed plane**.
- Enter **0.0** for **Top of stock**.
- Enter **-12.0** for **Depth**.
- Set all parameters to **Incremental**.

16. Click **OK** to generate the toolpath.

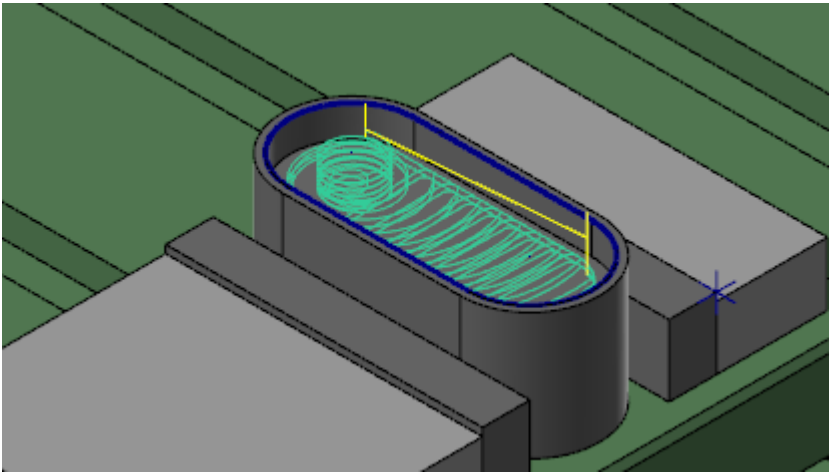

17. Save your file.

Exercise 5: Using the Second Plane to Create a Toolpath

In this exercise, you set the Tplane to **G58 PLANE,** and create a Dynamic Contour toolpath on the second vise.

1. In the Planes Manager, click the **C** column for the G58 PLANE to set the Cplane.

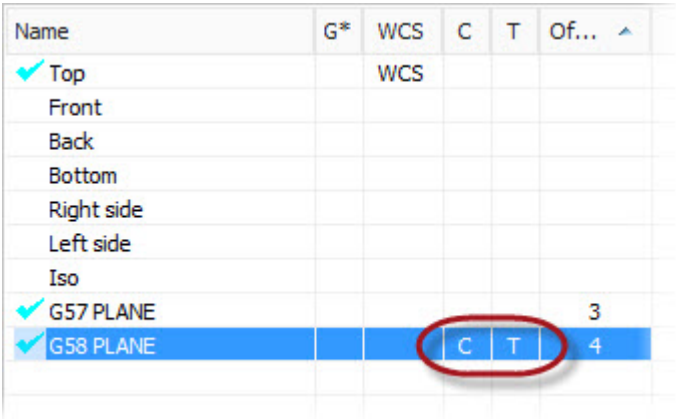

The Tplane follows.

2. Press [**F9**] to display the new Tplane/Cplane axes in blue.

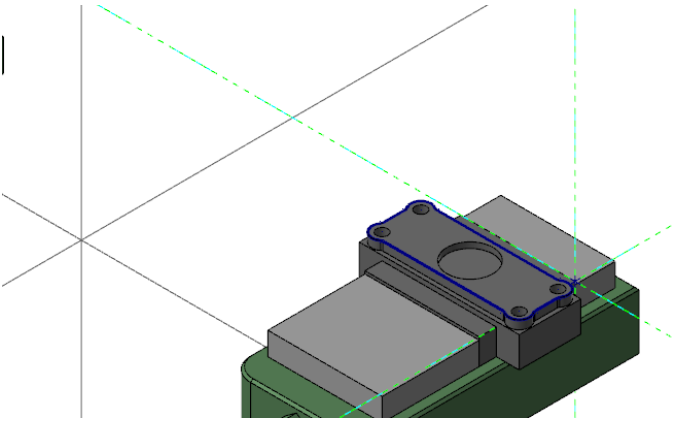

The fixture table has been hidden in the above image to make the axes easier to see.

3. Press [**F9**] again to hide the axes.
4. Select **Dynamic Contour** from the 2D gallery on the **Mill Toolpaths** contextual tab.

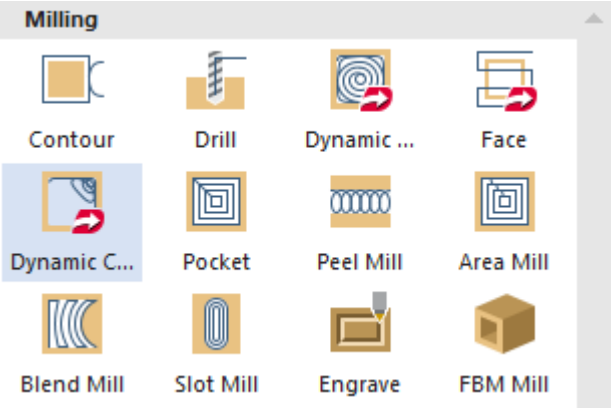

The Chain Options dialog box displays.

5. Click **Select** under Machining regions.

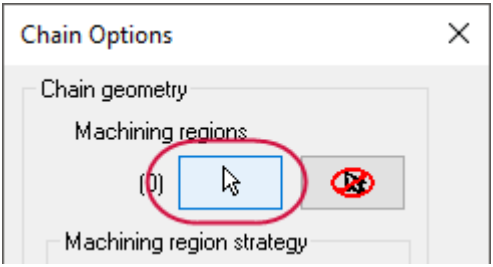

The Chaining dialog box displays.

6. Chain the contour at the top of the pocket in the G58 vise. The chain direction

needs to be clockwise for this operation.

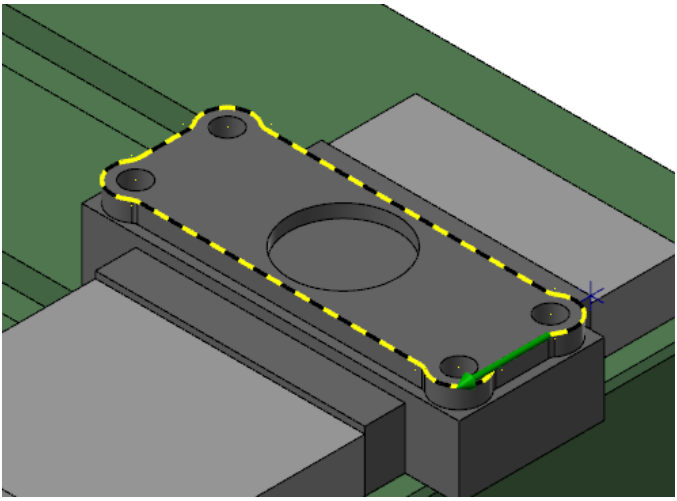

7. Click **OK** to close the Chaining dialog box and again in the Chain Options dialog box.

   The 2D High Speed Toolpath - Dynamic Contour dialog box displays.

8. Select the **Tool** page.

9. Select **6. FLAT ENDMILL** in the tool list.

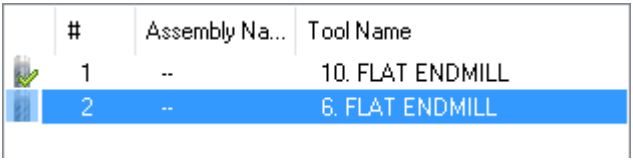

10. Enter **G58 - vise #2** in the **Comment** area.

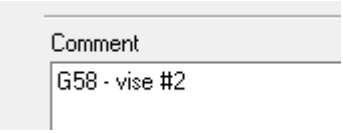

11. Select the **Linking Parameters** page.

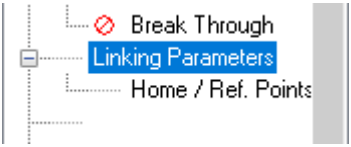

12. Enter the following parameters:

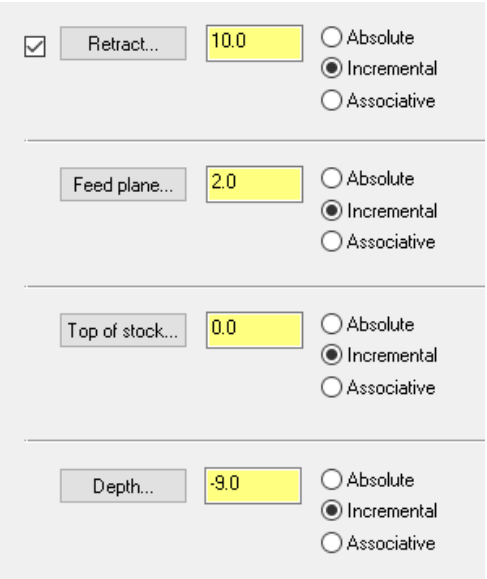

- Enter **10.0** for **Retract**.
- Enter **2.0** for **Feed plane**.
- Enter **0.0** for **Top of stock**.
- Enter **-9.0** for **Depth**.
- Set all parameters to **Incremental**.

13. Click **OK** to generate the toolpath.

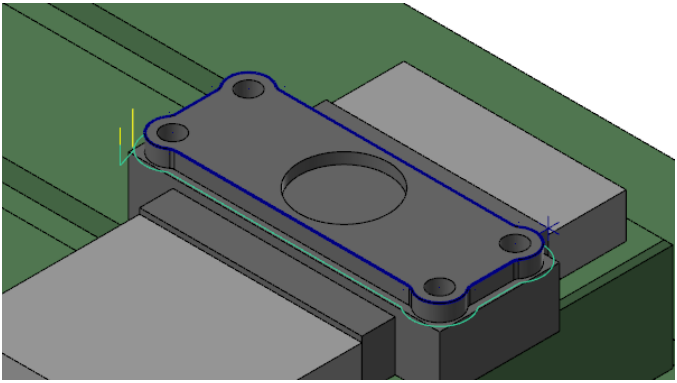

14. Save your file.

Exercise 6: Reviewing the NC Code

In this exercise, you post and review the NC code for both toolpaths.

1. In the Toolpaths Manager, select **Toolpath Group 1** to select all operations.

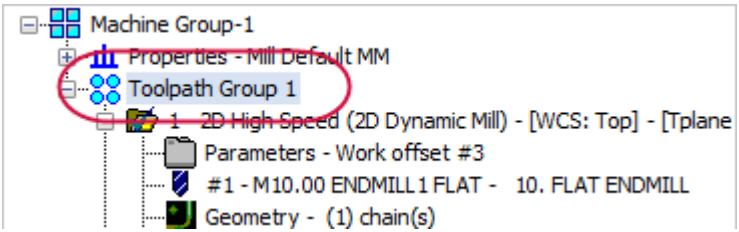

2. Select **Post selected operations** on the Toolpaths Manager.

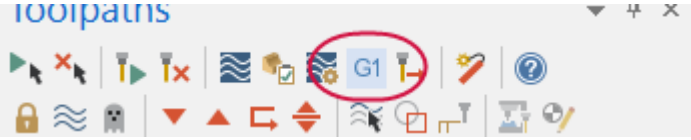

The Post processing dialog box displays.

3. Set the options as shown below, and click **OK**.

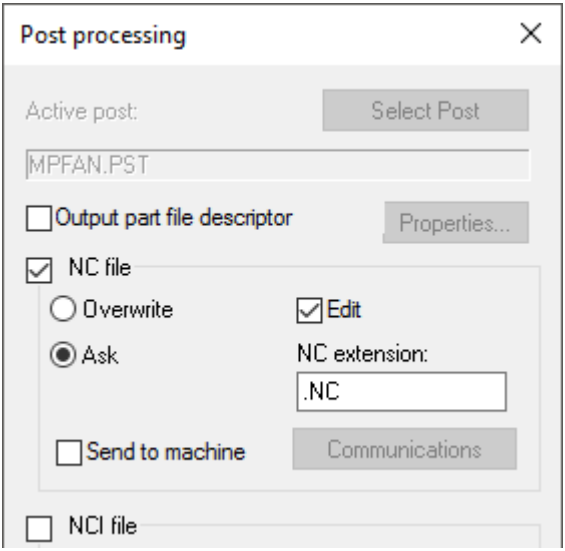

4. Click **Save** if prompted to save the NC file. Mastercam Code Expert opens.
5. Review the NC code when it displays. Use the line numbers in the image below to find the code.

```
11    ( G57 - VISE #1 )
12    N104 T1 M6
13    N106 G0 G90 G57 X-97.528 Y-35.592 A0. S2387 M3
14    N108 G43 H1 Z31.
15    N110 Z23.
```

```
4011    ( G58 - VISE #2 )
4012    N8102 T2 M6
4013    N8104 G0 G90 G58 X-138.655 Y-92.56 A0. S1989 M3
4014    N8106 G43 H2 Z24.
4015    N8108 Z16.
```

For each operation, Mastercam has reset the part zero (0,0,0) and output the proper work offset.

In the next lesson, you rotate and position a part, and update previously created toolpaths with a new WCS.

3

Updating Toolpaths

In this lesson, you rotate a part and create two new WCS planes. You then update each toolpath with one of the new WCS planes.

The part must be rotated, because the machine it was meant to be cut on is unavailable. To cut the part on a different machine, the toolpaths must also be reoriented. You can do this by utilizing the WCS, allowing you to continue producing parts with an available machine.

Lesson Goals

- Rotate the part and place it on the fixture.
- Create two new WCS planes for the toolpaths.
- Update each toolpath to use the new WCS planes.

Exercise 1: Rotating the Part

In this exercise, you rotate the part so that it is on the same angle as the fixture.

1. Open the part file, `HEART-LOCK`, that was provided with this tutorial.
2. Fit the geometry to the screen using [**Alt+F1**], if necessary.

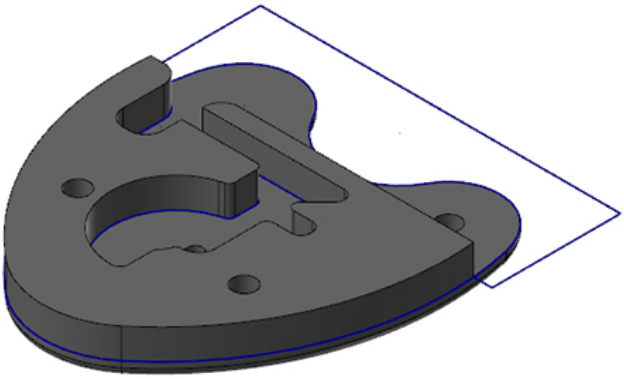

3. In the Toolpaths Manager, select **1 - Contour (Ramp)**.

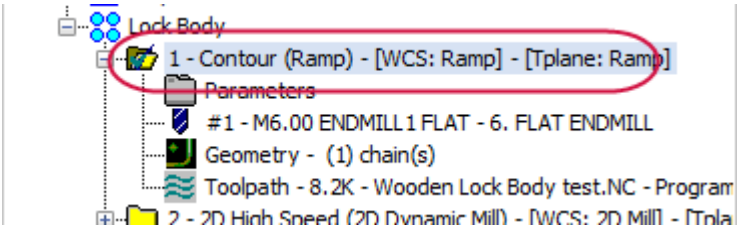

4. Select **Toggle display on selected operations** to display the Contour (Ramp) toolpath.

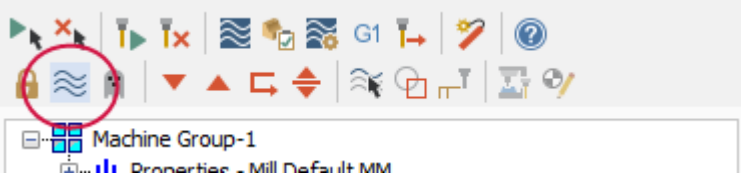

Notice how the toolpath looks.

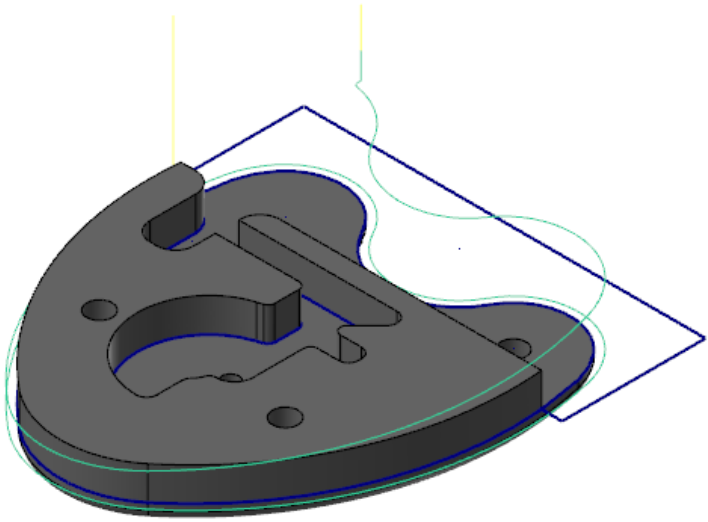

5. Display the toolpath motion for the Dynamic Mill toolpath and the Contour (2D) toolpath. When you finish viewing the toolpaths, turn off the display for all of them.

6. Select **Dynamic** on the **Transform** tab.

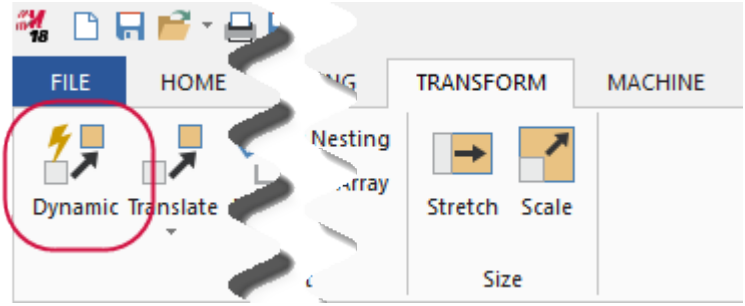

The Dynamic function panel displays.

7. Window select the solid body and wireframe, and press [**Enter**]. You can also press [**Ctrl+A**], followed by [**Enter**] to select everything.

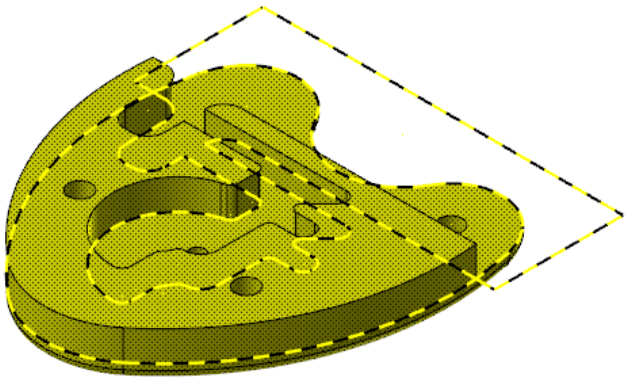

The Dynamic Gnomon displays.

8. Select the midpoint of the upper arc as the gnomon origin position.

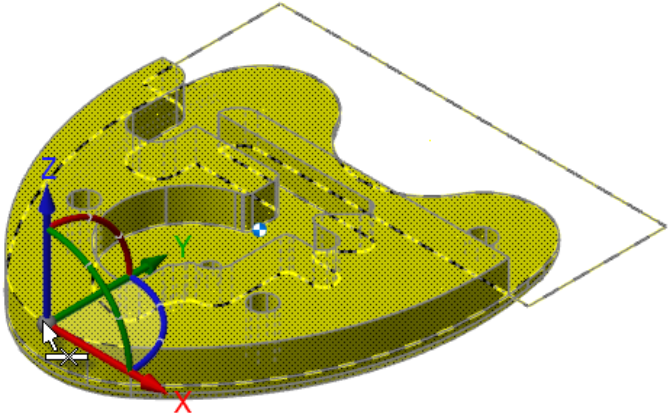

You may need to zoom in to find the correct position. Keep an eye on the mouse cursor, which becomes the midpoint AutoCursor symbol (shown above) when you are in the correct place.

9. Select the top segment of the curved control for 3D rotation.

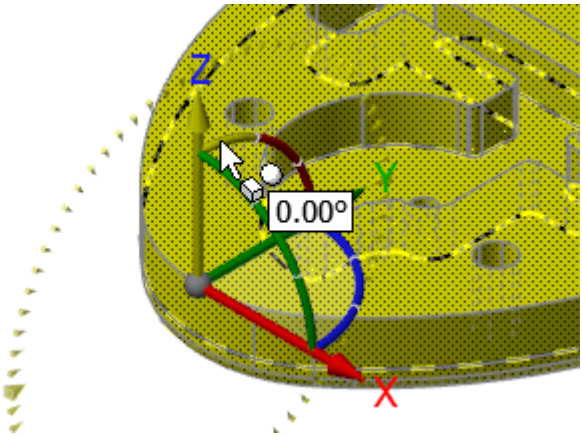

10. Type **10.0** and press [**Enter**].

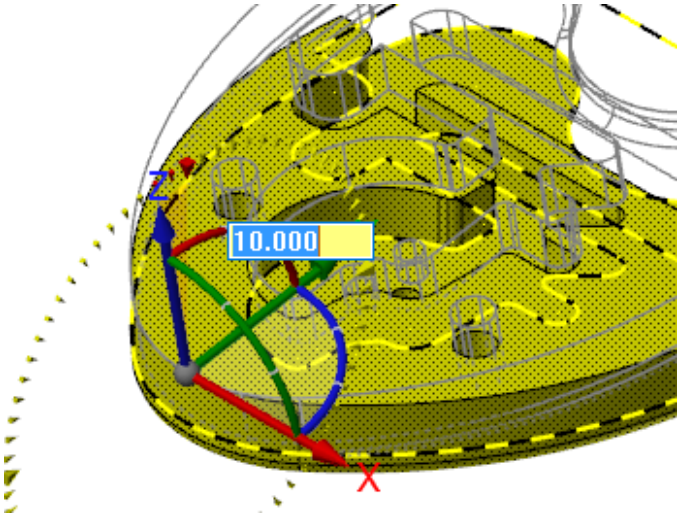

11. Press [**Enter**] again to accept the changes. Click **OK** in the Dynamic function panel.

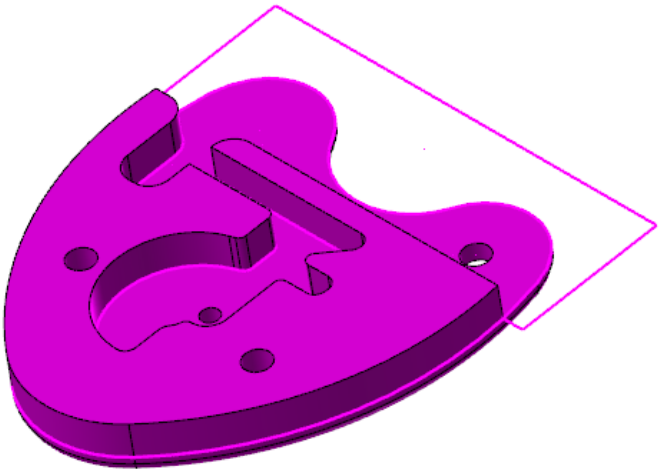

12. Right-click in the graphics window and select **Clear Colors**. This removes group and result colors from affected entities.

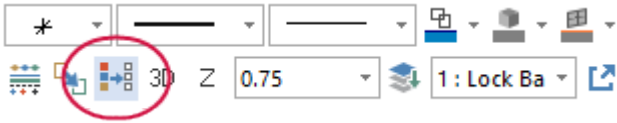

13. Select **Regenerate all dirty operations**.

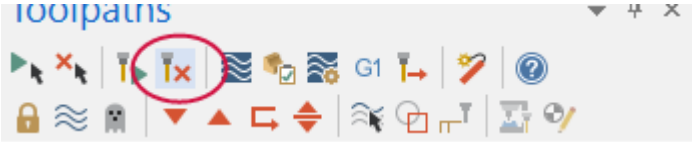

14. Choose **File**, **Save As**, and save the part file as `HEART-LOCK_XXX`, where `XXX` are your initials.

Exercise 2: Placing the Part on the Fixture

In this exercise, you place the rotated part onto the fixture.

1. Click the **Levels** tab in the lower-left corner of Mastercam's window.

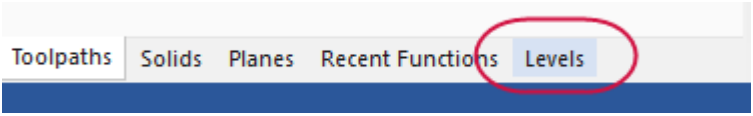

2. In the Levels Manager, select the **Visible** column for level **10**.

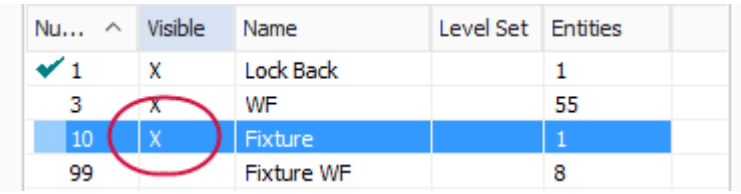

Nu...	Visible	Name	Level Set	Entities
1	X	Lock Back		1
3	X	WF		55
10	X	Fixture		1
99		Fixture WF		8

The graphics window will now display the **Fixture** level. Fit to the screen, if necessary.

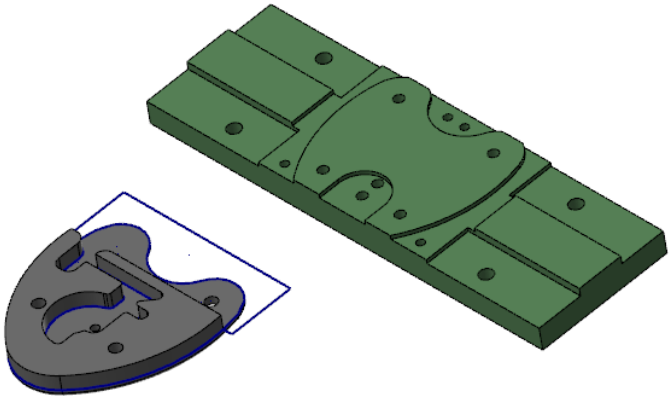

3. From the **Transform** tab, select **Translate**.
4. Window select the solid body and wireframe, and then press [**Enter**]. You can also click **End Selection** to accept the selections.

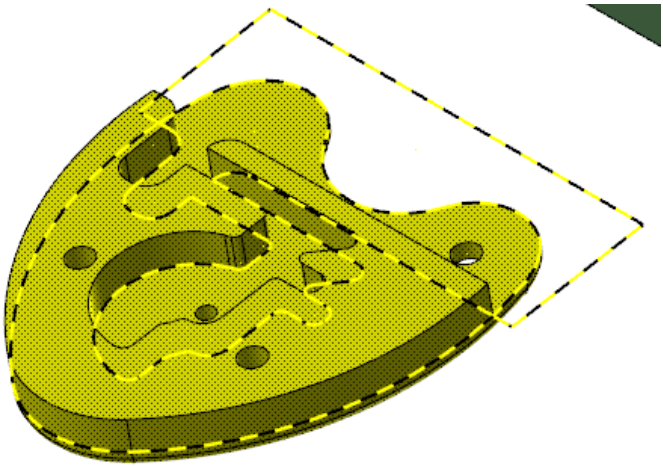

The Translate function panel displays.

5. Set **Method** to **Move**.

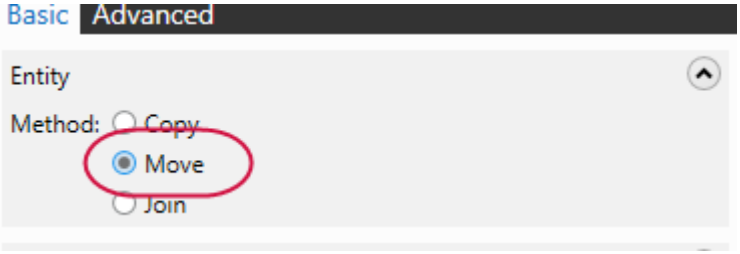

6. Click **Reselect** under **Vector From/To** to return to the graphics window.

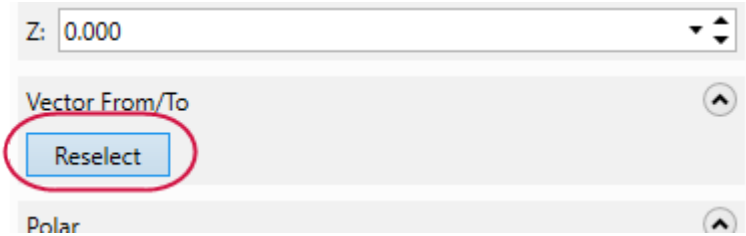

You will now select the points to translate from and to translate to.

7. In the Planes Manager, change the **Gview** to **Bottom**.

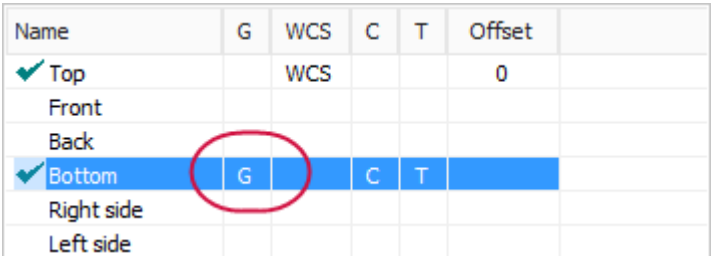

This view helps to select the point from which to translate.

8. Select the circle center point indicated below on the solid part. Be sure that you select the center point of the circle on the bottom of the part. This is indicated by the center point AutoCursor symbol shown below.

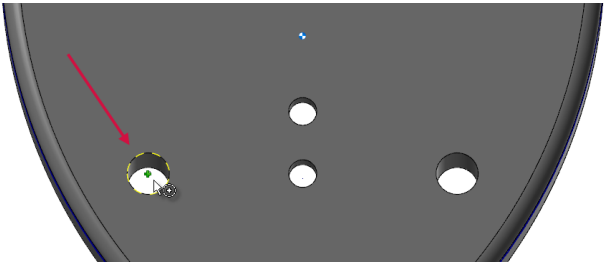

9. Right-click in the graphics window, and select **Isometric (WCS)**. This rotates your view back to Isometric.

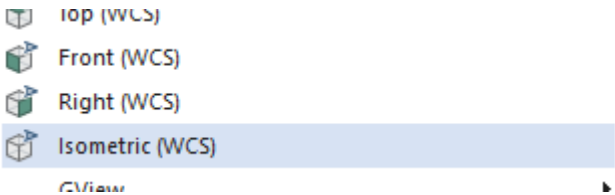

10. Select the circle center point indicated below. Be sure that you select the center point of the circle on the top of the fixture. As you move the mouse, watch for the center point AutoCursor symbol shown.

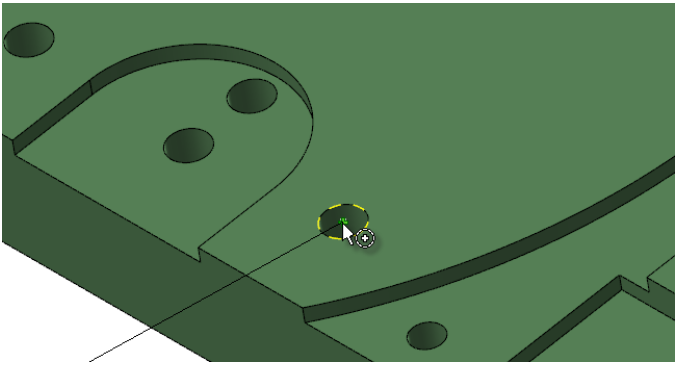

11. The part is then moved over the fixture. Ensure that holes on the part and fixture line up.

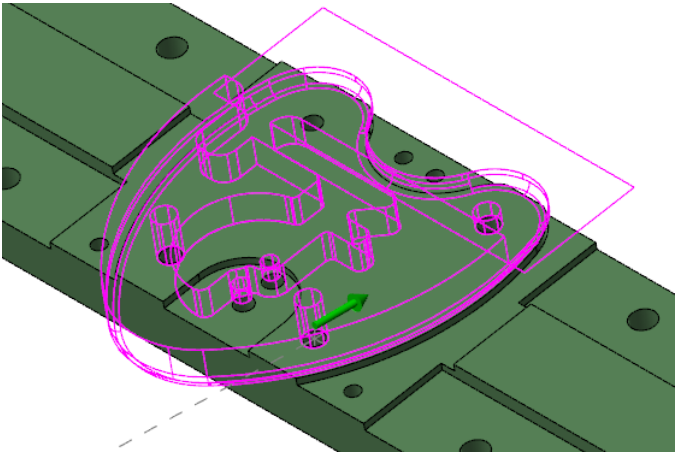

12. Click **OK** in the Translate function panel to move the part onto the fixture.

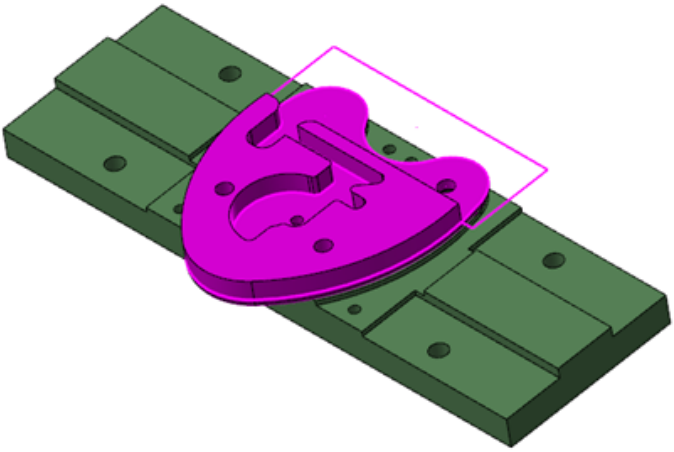

Notice in the Toolpaths Manager that, after moving the solid body and geometry, the toolpaths are marked dirty.

13. Right-click in the graphics window and select **Clear Colors**.

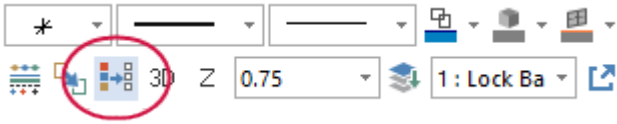

14. In the Toolpaths Manager, select **Regenerate all dirty operations**.

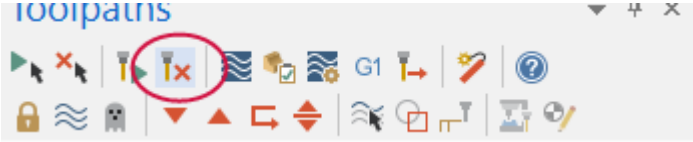

15. Select the **Lock Body** toolpath group.

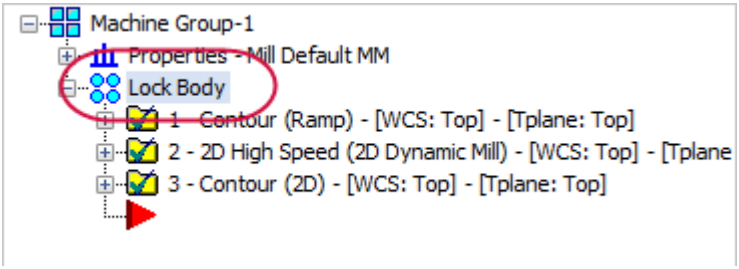

16. Select **Toggle display on selected operations**.

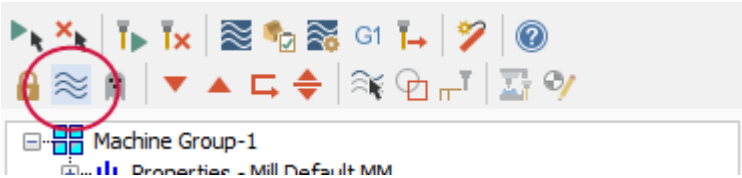

17. Notice where the toolpaths are located.

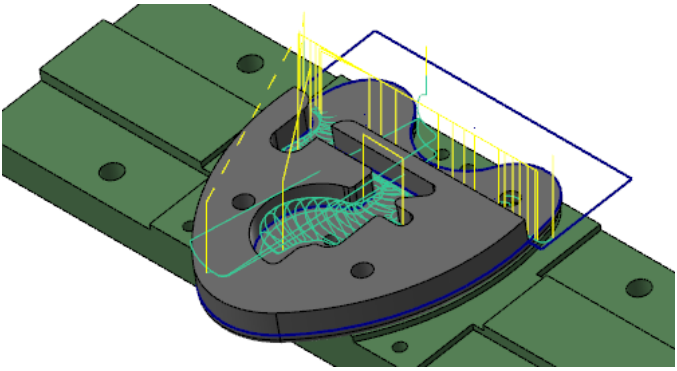

The toolpaths are no longer dirty, but they are not machining the part correctly.

18. Select **Toggle display on selected operations** again to hide the toolpaths.
19. Save your file.

Exercise 3: Creating New WCS Planes

In this exercise, you create two new WCS planes corresponding to the geometry to be machined, one plane for the Contour (Ramp) toolpath and one plane for both the Dynamic Mill and Contour (2D) toolpaths.

1. Select **Levels** in the lower-left corner of Mastercam's window.

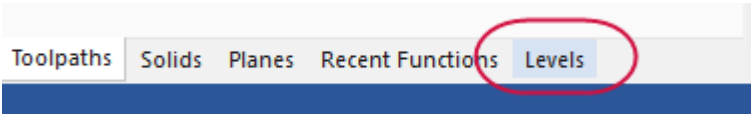

2. In the Levels Manager, click in the **Number** column for level **3** to change it to the main level.

Nu...	Visible	Name	Level Set	Entities
1	X	Lock Back		1
3	X	WF		55
10	X	Fixture		1
99		Fixture WF		8

3. Turn off (click) in the **Visible** column for levels **10** and **1**.

Nu...	Visible	Name	Level Set	Entities
1		Lock Back		1
3	X	WF		55
10		Fixture		1
99		Fixture WF		8

The graphics window no longer displays the Fixture level or the Lock Back level.

You now create a WCS plane for the Contour (Ramp) toolpath.

4. Click the **Planes** tab.
5. In the Planes Manager, select **Create a new plane**, **From geometry**.

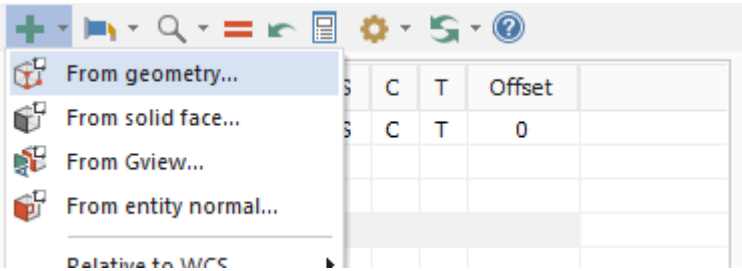

6. Select the arc shown below. The Select plane dialog box displays, along with the XYZ gnomon.

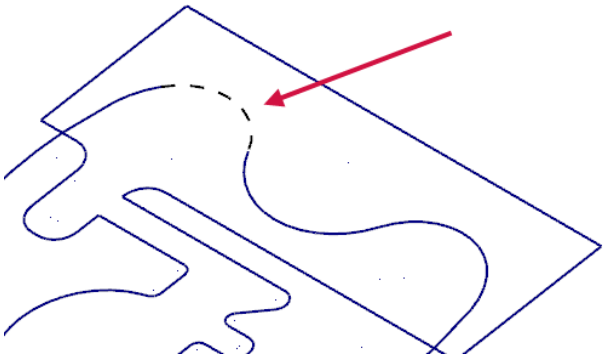

7. Cycle through the potential planes until the one shown on the image one is displayed, and click **OK**.

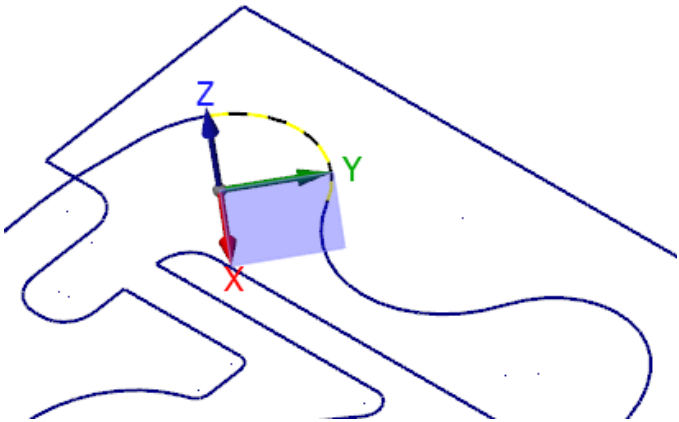

The New Plane function panel displays.

8. Enter **Ramp** for the **Name**.

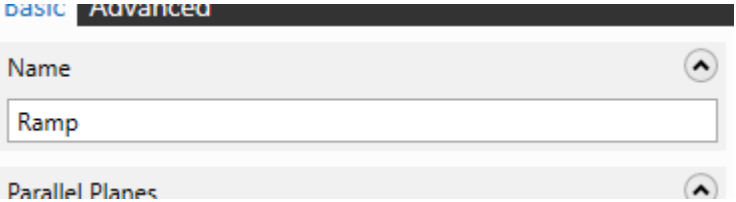

9. Click **OK** to create the new plane.

Now you create the plane for the Dynamic Mill and Contour (2D) toolpath.

10. From the Planes Manager, select **Create a new plane**, **From geometry**.

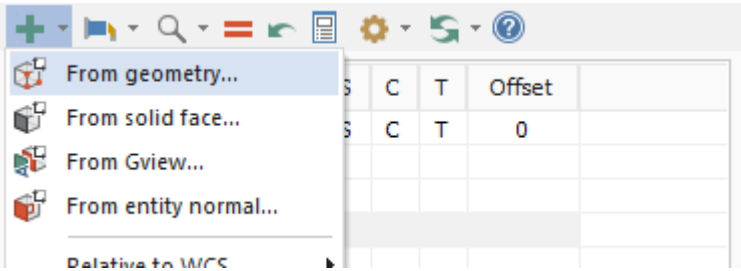

11. Select the lines shown below, in the order they are numbered. The Select plane dialog box displays, along with the XYZ gnomon. You may need to zoom in to select the second line.

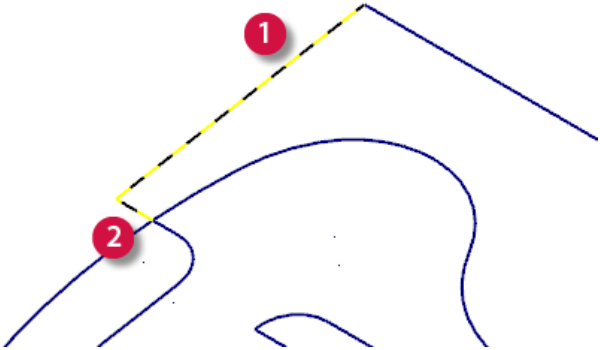

12. Cycle through the potential planes until the one shown on the image one is displayed, and click **OK**.

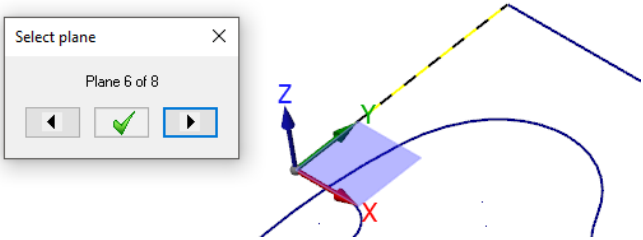

The New Plane function panel displays.

13. Enter **2D Mill** for the **Name**.

14. Click **OK** to create the new plane.

Exercise 4: Updating the Contour (Ramp) Toolpath

In this exercise, you update the Contour (Ramp) toolpath to use the WCS plane created in the previous exercise.

1. Select the **Levels** tab.

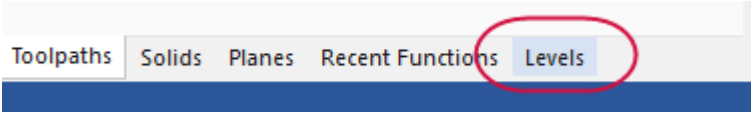

2. Select the **Visible** column for level **1**.

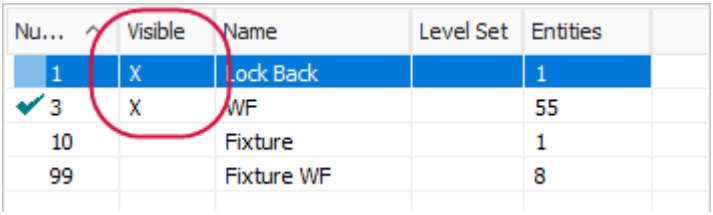

3. Select the **Toolpaths** tab.

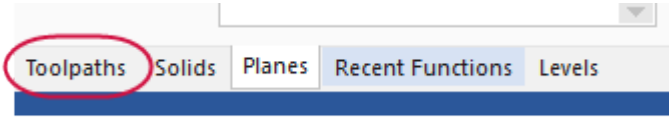

4. Select **Parameters** under the Contour (Ramp) toolpath.

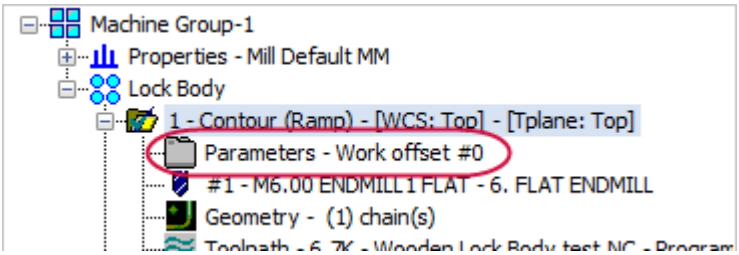

5. Select the **Planes (WCS)** page.

6. Click **Select WCS plane** under the Working coordinate system group.

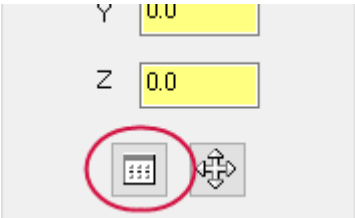

The Plane Selection dialog box displays.

7. Select **Ramp** from the plane list.

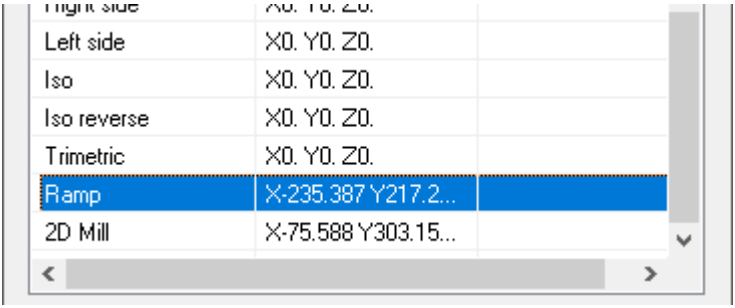

8. Click **OK**.

9. Select **Copy to tool plane** and **Copy to construction plane**, shown below.

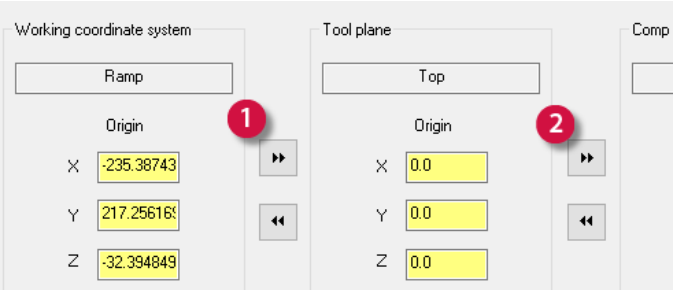

By setting the Tool plane and Comp/construction plane to the WCS, you will see tool motion commands dimensioned from the part origin, as if it were lying flat.

10. Click **OK** to save your changes and exit the 2D Toolpaths - Contour dialog box.
11. In the Toolpaths Manager, select **Regenerate all dirty operations**.

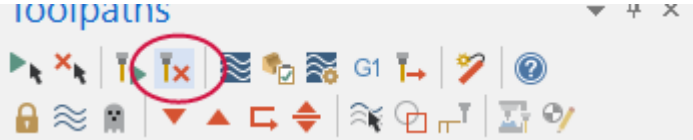

This regenerates the Contour (Ramp) toolpath.

12. If necessary, select the **Contour (Ramp)** toolpath.

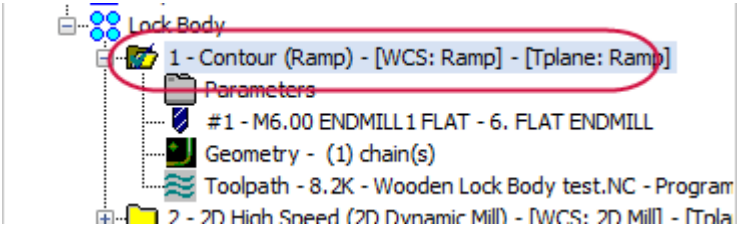

13. With the toolpath selected, select **Toggle display on selected operations**.

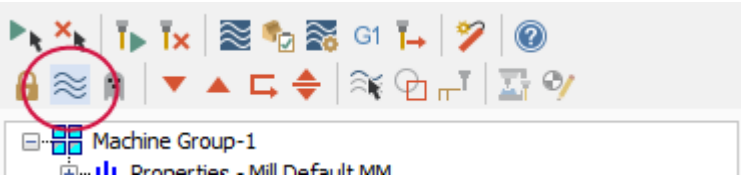

14. Notice how the toolpath is now correctly machining the part.

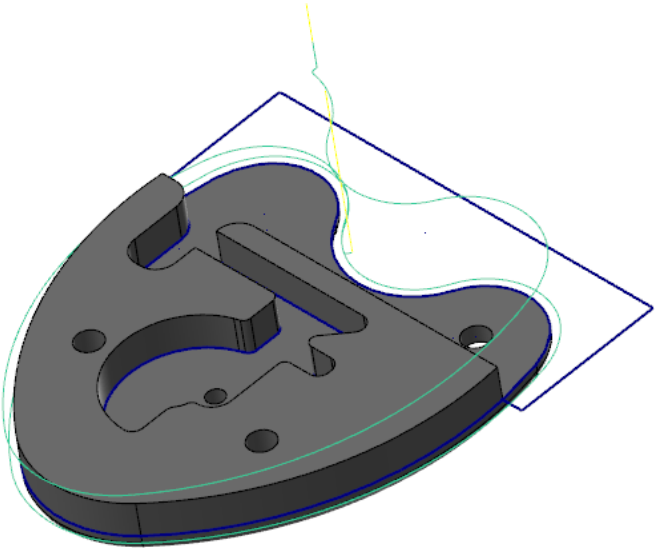

15. Select **Toggle display on selected operations** again to hide the toolpath.
16. Save your file.

Exercise 5: Updating the Dynamic Mill Toolpath

In this exercise, you update the Dynamic Mill toolpath to use the WCS plane you created.

1. In the Toolpaths Manager, select **Parameters** under the 2D High Speed (2D Dynamic Mill) toolpath.

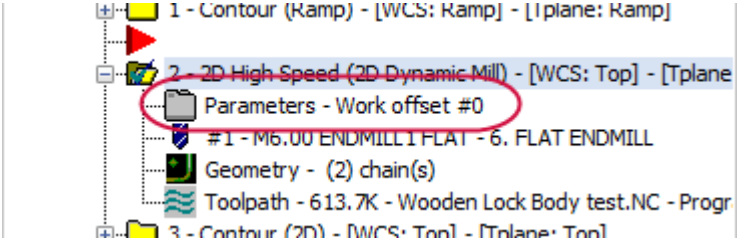

The 2D High Speed Toolpath - Dynamic Mill dialog box displays.

2. Select the **Planes (WCS)** page.

3. Click **Select WCS plane** under the Working coordinate system group.

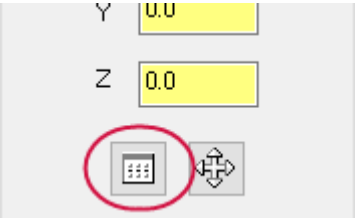

The Plane Selection dialog box displays.

4. Select **2D Mill** from the plane list, and click **OK**.

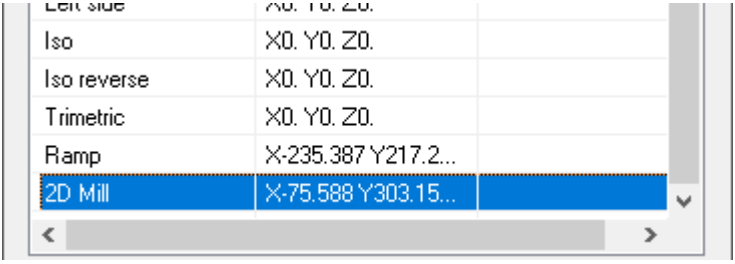

5. Click **Copy to tool plane** and **Copy to construction plane**.
6. Click **OK** to save your changes and exit the 2D High Speed Toolpath - Dynamic Mill dialog box.
7. In the Toolpaths Manager, select **Regenerate all dirty operations**.

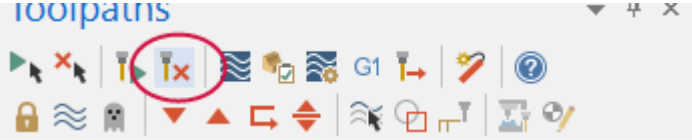

This regenerates the Dynamic Mill toolpath.

8. If necessary, select the **2D Dynamic Mill** toolpath.

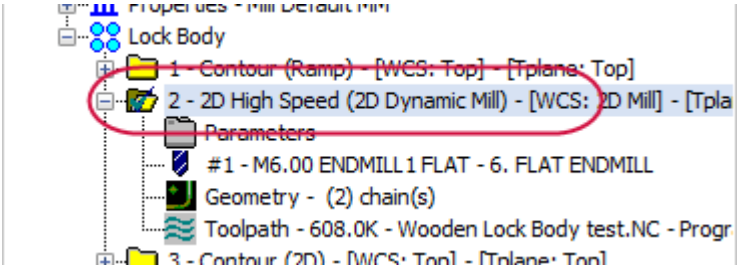

9. With the toolpath selected, select **Toggle display on selected operations**.

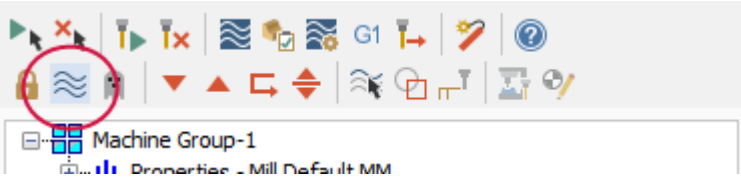

10. Notice how the toolpath is now correctly machining the part.

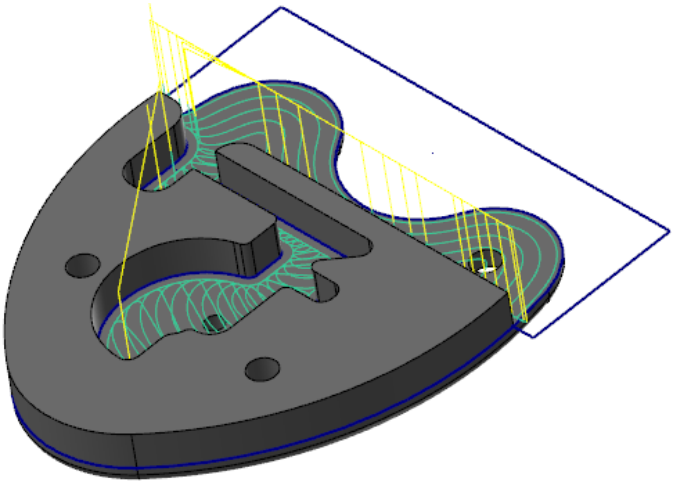

11. Select **Toggle display on selected operations** again to hide the toolpath.
12. Save your file.

Exercise 6: Updating the Contour (2D) Toolpath

In this exercise, you update the Contour (2D) toolpath to use the WCS plane you created.

1. In the Toolpaths Manager, select **Parameters** under the Contour (2D) toolpath.

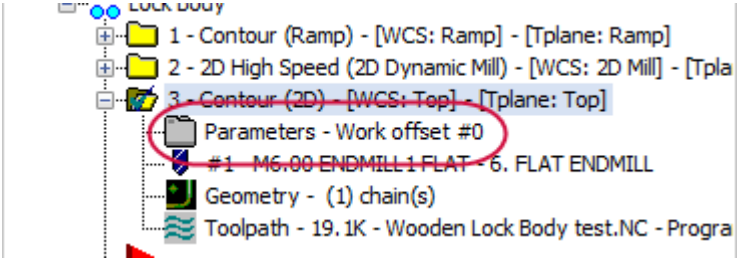

The 2D Toolpaths - Contour dialog box displays.

2. Select the **Planes (WCS)** page.

3. Click **Select WCS plane** under the Working coordinate system group.

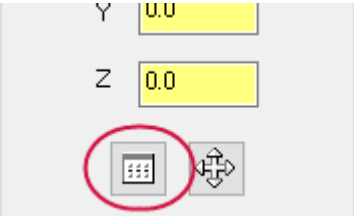

The Plane Selection dialog box displays.

4. Select **2D Mill** from the plane list, and click **OK**.

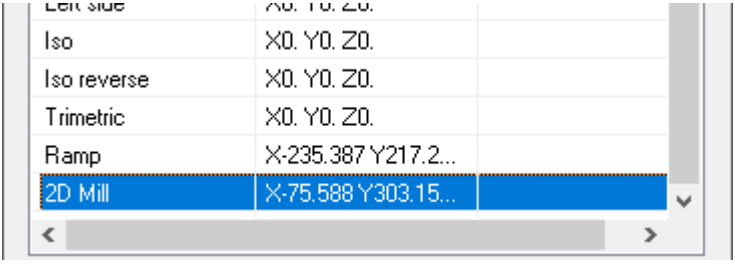

5. Click **Copy to tool plane** and **Copy to construction plane**.
6. Click **OK** to save your changes and exit the 2D Toolpaths - Contour dialog box.
7. In the Toolpaths Manager, select **Regenerate all dirty operations**.

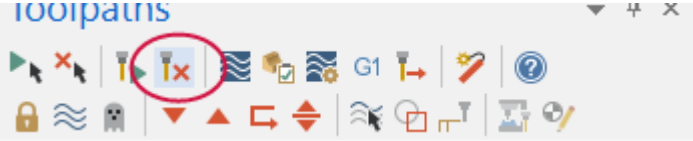

8. If necessary, select the **Contour (2D)** toolpath.

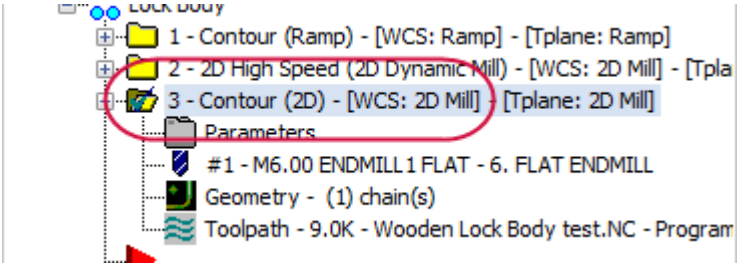

9. With the toolpath selected, select **Toggle display on selected operations**.

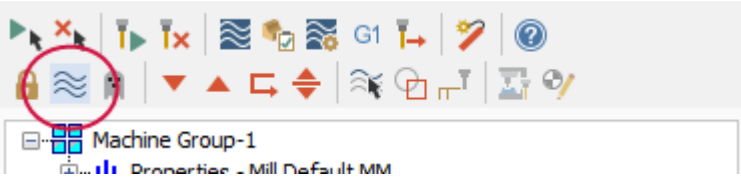

10. Notice how the toolpath is now correctly machining the part.

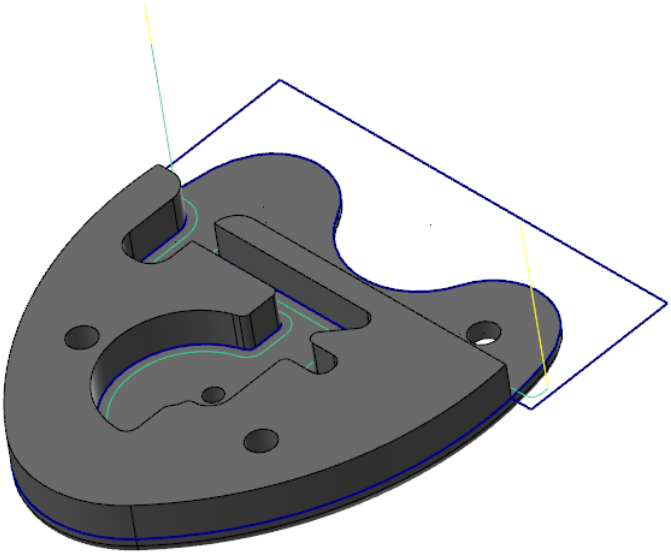

11. Select **Toggle display on selected operations** again to hide the toolpath.
12. Save your work.

Exercise 7: Backplotting the Toolpaths

In this exercise, you backplot the toolpaths to see the tool motion.

1. Select the **Lock Body** toolpath group in the Toolpaths Manager to select all of the toolpaths.

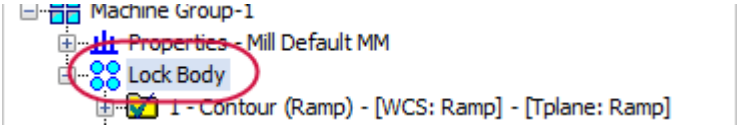

2. Select **Backplot selected operations** in the Toolpaths Manager.

   The Backplot dialog box displays.

3. Click **Play** in the backplot controls to see the machining motion for all toolpaths.

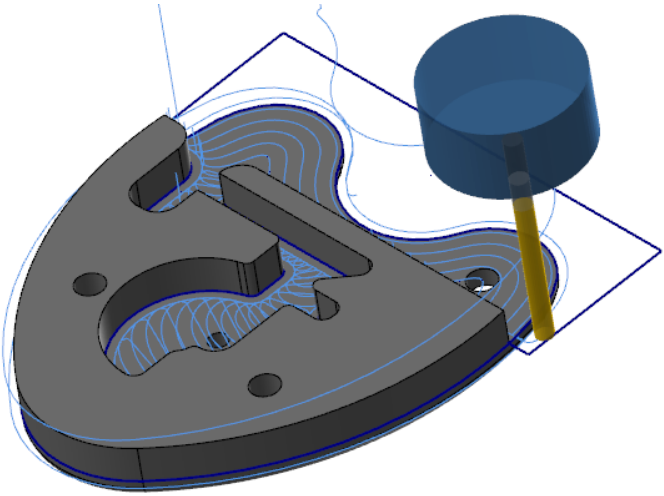

   The tool axis does not rotate.

4. Click **OK** in the backplot dialog box when you have finished reviewing the tool motion.
5. Save your file.

Conclusion

Congratulations! You have completed the *Introduction to Work Coordinate System (WCS)* tutorial! Now that you have mastered the skills in this tutorial, explore Mastercam's other features and functions.

You may be interested in other tutorials that we offer. Mastercam tutorials are being constantly developed, and we will add more as we complete them. Visit our website, or select **Help**, **Tutorials** from the **File** tab.

Mastercam Resources

Enhance your Mastercam experience by using the following resources:

- *Mastercam Documentation*—Mastercam installs a number of helpful documents for your version of software in the Documentation folder of your Mastercam 2018 installation.
- *Mastercam Help*—Access Mastercam Help by selecting **Help**, **Contents** from Mastercam's File tab or by pressing [**Alt+H**] on your keyboard.
- *Mastercam Reseller*—Your local Mastercam Reseller can help with most questions about Mastercam.
- *Technical Support*—Our Technical Support department (860-875-5006 or support@mastercam.com) is open Monday through Friday from 8:00 a.m. to 5:30 p.m. USA Eastern Standard Time.
- *Mastercam Tutorials*—We offer a series of tutorials to help registered users become familiar with basic Mastercam features and functions. Visit our website, or select **Help**, **Tutorials** from Mastercam's File tab to see the latest publications.
- *Mastercam University*—Mastercam University, an affordable online learning platform, gives you 24/7 access to Mastercam training materials. Take

advantage of more than 180 videos to master skills at your own pace and help prepare for Mastercam Certification. For more information on Mastercam University, please contact your Authorized Mastercam Reseller, visit www.mastercamu.com, or email training@mastercam.com.

- *Online Communities*—You can find a wealth of information at www.-mastercam.com. For tech tips and the latest Mastercam news, follow us on Facebook (www.facebook.com/mastercam), Twitter (www.twitter.com/mastercam), or Google+ (plus.google.com/+mastercam). Visit our YouTube channel to see Mastercam in action (www.youtube.com/user/MastercamCadCam)! Registered users can search for information or ask questions on the Mastercam Web forum, forum.mastercam.com, or use the knowledgebase at kb.mastercam.com.

Contact Us

For questions about this or other Mastercam documentation, contact the Technical Documentation department by email at techdocs@mastercam.com.

ATTENTION! UPDATES MAY BE AVAILABLE. PLEASE REFER TO MASTERCAM.COM/SUPPORT FOR THE LATEST DOWNLOADS.

CNC Software, Inc.
671 Old Post Road
Tolland, CT 06084 USA
www.mastercam.com

Mastercam
Be Dynamic.

Mastercam® is a registered trademark of CNC Software, Inc. © 1983-2017. All rights reserved.
All other trademarks are property of their respective owners.